PIKE 9,9

Production year 2010
Production année 2010

PARTS CATALOGUE

CATALOGUE DE PIECES DETACHEES

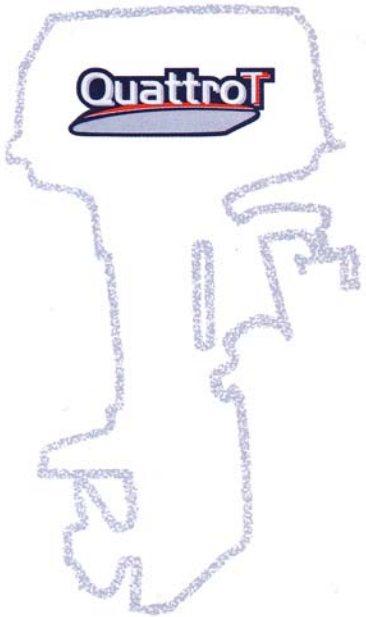

ENGINE STARTING SERIAL NUMBER: S/L 1012427

A1

FOREWORD

This Parts Catalogue is related to the parts for the model(s) on the cover page. When you are ordering replacement parts, please refer to this Parts Catalogue and quote both part numbers and part names correctly.

1. Modifications or additions which have been made after the issue of the Parts Catalogue will be announced in the Parts News.
   It is advisable that you make the necessary corrections to the Parts Catalogue according to the Parts News.

2. Abbreviations
   The following abbreviations are used in this Parts Catalogue.

   "UR" Use specified parts number.
   "UN" Use as many as needed.
   "AP" Alternate Parts
   "LM" Locally Made (Parts need to be ordered locally)
   "F#" Frame No. (Applicable machine No.)
   "O/S" Over Size

3. The number of components for assembly
   - Parts, which are to be supplied in an assembly, are listed with a dot (.) in front of the part name as shown below.
   - The numeral appearing to the right of each component part indicates the quantity of parts for each assembly unit.

PART NO.	DESCRIPTION	Q'TY	REMARKS
2F5–83310–60	FRONT FLASHER LIGHT ASSY	2	
115–83311–60	.BULB (6V–18W)	1	

4. Applicable colours of graphics are represented in the "REMARKS" as shown below.

PART NO.	DESCRIPTION	Q'TY	REMARKS
2N4–24110–00–X5	FUEL TANK COMP.	2	MXR
3J1–24240–10	.GRAPHIC, FUEL TANK	1	FOR MXR

5. Note that the illustrations for reference in finding parts numbers are not to be used for assembling. When assembling, please use the applicable service manual.

6. The asterisk (*) before a reference number indicates modified items after the first edition.

7. Applicable Serial No.

   Engine Serial No.

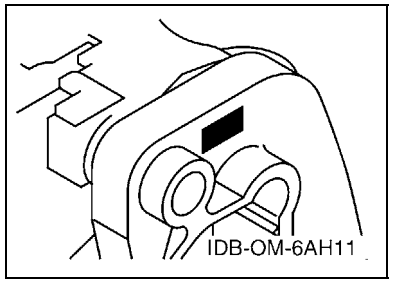

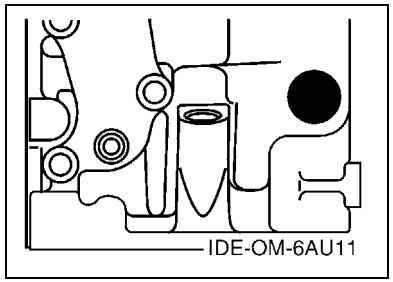

8. Applicable Engine Starting Serial No.

Model	Serial No.	Model	Serial No.
Pike 9,9	6AUK-1012427		

9. Applicable Colour Code

Abbreviation	Colour Name	Colour Code
DBNM2	DARK BLUISH GRAY METALLIC 2	004D

10. Quantity Column Information

Column No.	Name Of Q'ty Column	Applicable Model
1	M	Pike 9,9 M
2	E	Pike 9,9 E

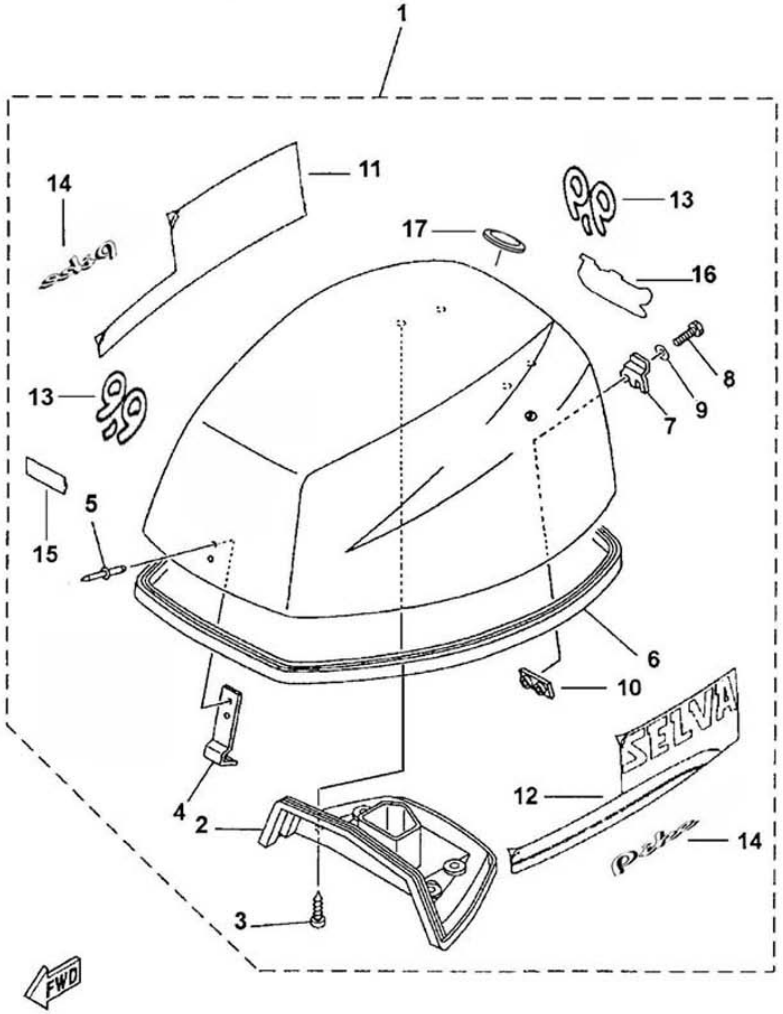

FIG. 1 TOP COWLING — CAPOT SUPERIEUR

REF. NO.	PART NO. N° PIECES	DESCRIPTION DESCRIPTION		M	E			REMARKS REMARQUES
1	1504744	.TOP COWLING ASSY (Manual starting) .CAPOT - DEMARRAGE MANUEL (ENS.)		1				
	1504746	.TOP COWLING ASSY (Electric starting) .CAPOT - DEMARRAGE ELECTRIQUE (ENS.)			1			
2	60R–G2613–00	.MOLDING, AIR DUCT .MANCHON A AIR		1	1			
3	97780–60516	.SCREW, TAPPING .VIS, TETE BOMBEE		4	4			
4	6G1–42651–02	.HOOK .CROCHET		1	1			
5	90266–04M04	.RIVET .RIVET		2	2			
6	60R–42615–00	.SEAL .JOINT		1	1			
7	60R–42652–00	.HOOK .CROCHET		1	1			
8	97095–05014	.BOLT .BOULON		2	2			
9	92995–05600	.WASHER .RONDELLE		2	2			
10	68T–42649–00	.HOLDER, CLAMP BAND .SUPPORT, SANDOW DE SERRAGE		1	1			
11	8092285	.GRAPHIC,LEFT .ADHESIF, GAUCHE		1	1			
12	8092290	.GRAPHIC, RIGHT .ADHESIF, DROITE			1			
13	8093105	.GRAPHIC,9,9 .ADHESIF,9,9		1	1			
14	8093110	.GRAPHIC, PIKE .ADHESIF, PIKE		1	2			
15	8092605	.GRAPHIC, SELVA MARINE .ADHESIF, SELVA MARINE			1			
16	8093050	GRAFIC, QUATTRO T ADHESIF, QUATTRO T		1	1			
17	1533976	.GRAPHIC, SELVAMARINE EUROPE .ADHESIF, SELVAMARINE EUROPE		1	1			
	1534310	.GRAPHIC, SET .JEU DIEMBLEMES		1	1			

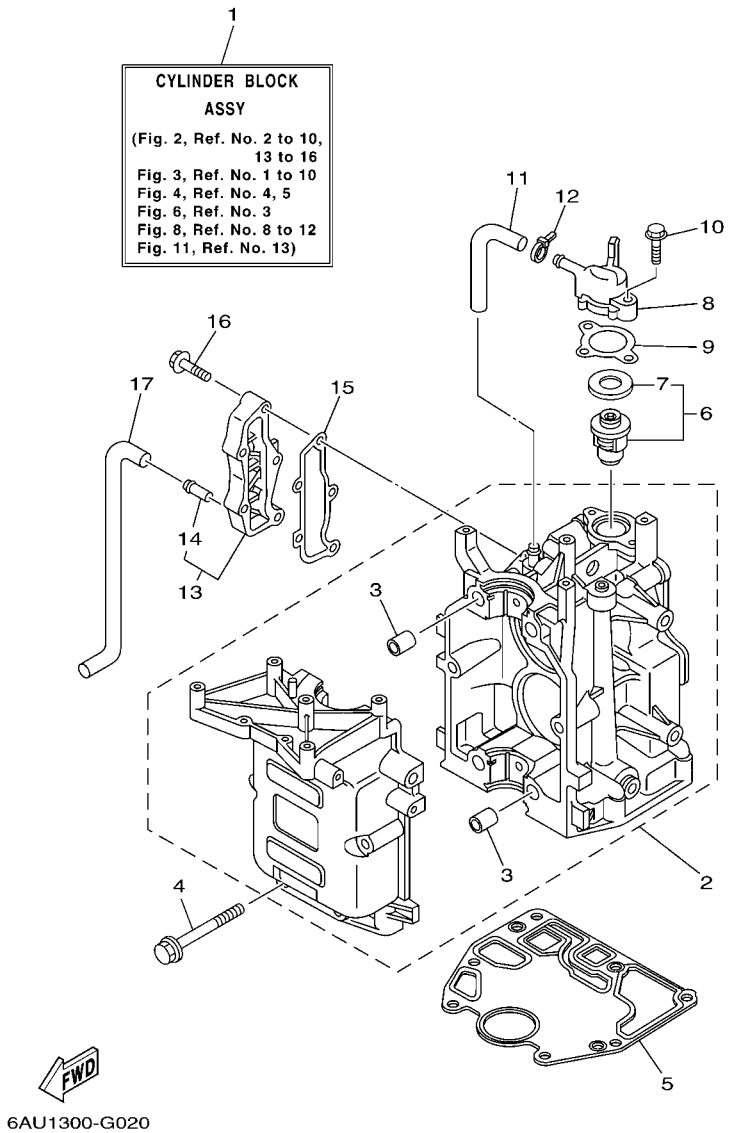

FIG. 2 CYLINDER & CRANKCASE 1 CYLINDRE & CARTER 1

REF. NO.	PART NO. N° PIECES	DESCRIPTION DESCRIPTION	M	E				REMARKS REMARQUES
1	6AU–W009B–00–1S	CYLINDER BLOCK ASSY CYLINDRE GROUPE (ENS.)	1	1				
2	6AU–15100–00–1S	CRANKCASE ASSY CARTER DE MOTEUR COMPLET	1	1				
3	99530–12016	.PIN, DOWEL .GOUJON, D'ASSEMBLAGE	4	4				
4	90119–08M29	BOLT, WITH WASHER BOULON, AVEC RONDELLE	6	6				
5	68T–11351–00	GASKET, CYLINDER JOINT, D'EMBASE	1	1				
6	66M–12411–01	THERMOSTAT THERMOSTAT	1	1				
7	688–12412–00	.SEAL, THERMOSTAT .JOINT, THERMOSTAT	1	1				
8	68T–12413–00–1S	COVER, THERMOSTAT COUVERCLE, THERMOSTAT	1	1				
9	6G8–12414–A0	GASKET, COVER JOINT, COUVERCLE	1	1				
10	90119–06MA2	BOLT, WITH WASHER BOULON, AVEC RONDELLE	2	2				
11	68T–12481–00	PIPE 1 DURITE 1	1	1				
12	90465–11M10	CLAMP BRIDE	1	1				
13	6AU–41113–00–1S	OUTER COVER, EXHAUST COUVERCLE, ECHAPPEMENT	1	1				
14	6E9–24378–00	.PIPE, JOINT 3 .DURITE RACCORDEMENT 3	1	1				
15	68T–41114–A0	GASKET, EXHAUST OUTER COVER JOINT, COUVERCLE D'ECHAPPEMENT	1	1				
16	90119–06MA3	BOLT, WITH WASHER BOULON, AVEC RONDELLE	5	5				
17	68T–12482–00	PIPE 2 DURITE 2	1	1				

FIG. 3 CRANKSHAFT & PISTON VILEBREQUIN & PISTON

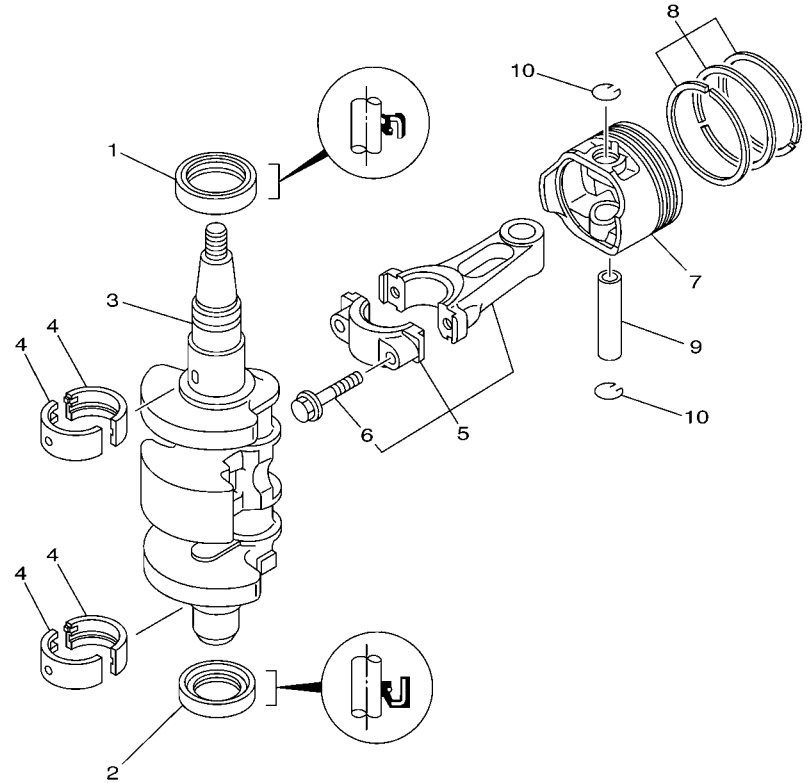

68R0010-0031

REF. NO.	PART NO. N° PIECES	DESCRIPTION DESCRIPTION	M	E				REMARKS REMARQUES
1	93102–30M22	OIL SEAL JOINT SPY	1	1				
2	93101–25M69	OIL SEAL JOINT SPY	1	1				
3	6AU–11411–00	CRANKSHAFT VILEBREQUIN COMPLET	1	1				
4	68T–11416–00	PLANE BEARING, CRANKSHAFT 1 COUSSINET DE VILEBREQUIN 1	4	4				UR BROWN UR BROWN
	68T–11416–10	PLANE BEARING, CRANKSHAFT 1 COUSSINET DE VILEBREQUIN 1	4	4				UR BLACK UR BLACK
	68T–11416–20	PLANE BEARING, CRANKSHAFT 1 COUSSINET DE VILEBREQUIN 1	4	4				UR BLUE UR BLUE
5	6AU–11650–00	CONNECTING ROD ASSY BIELLE COMPLETTE	2	2				
6	67D–11654–00	.BOLT, CONNECTING ROD .BOULON, BIELLE	2	2				
7	6AU–11631–00–96	PISTON (STD) PISTON (STD)	2	2				
	6AU–11635–00	PISTON (0.25MM O/S) PISTON (0.25MM O/S)	2	2				AP AP
	6AU–11636–00	PISTON (0.50MM O/S) PISTON (0.50MM O/S)	2	2				AP AP
8	68T–11603–01	PISTON RING SET (STD) JEU DE SEGMENTS (STD)	2	2				
	68T–11604–01	PISTON RING SET (0.25MM O/S) JEU DE SEGMENTS (0.25MM O/S)	2	2				AP AP
	68T–11605–01	PISTON RING SET (0.50MM O/S) JEU DE SEGMENTS (0.50MM O/S)	2	2				AP AP
9	68T–11633–00	PIN, PISTON AXE, PISTON	2	2				
10	93450–15023	CIRCLIP CIRCLIP, TYPE S	4	4				

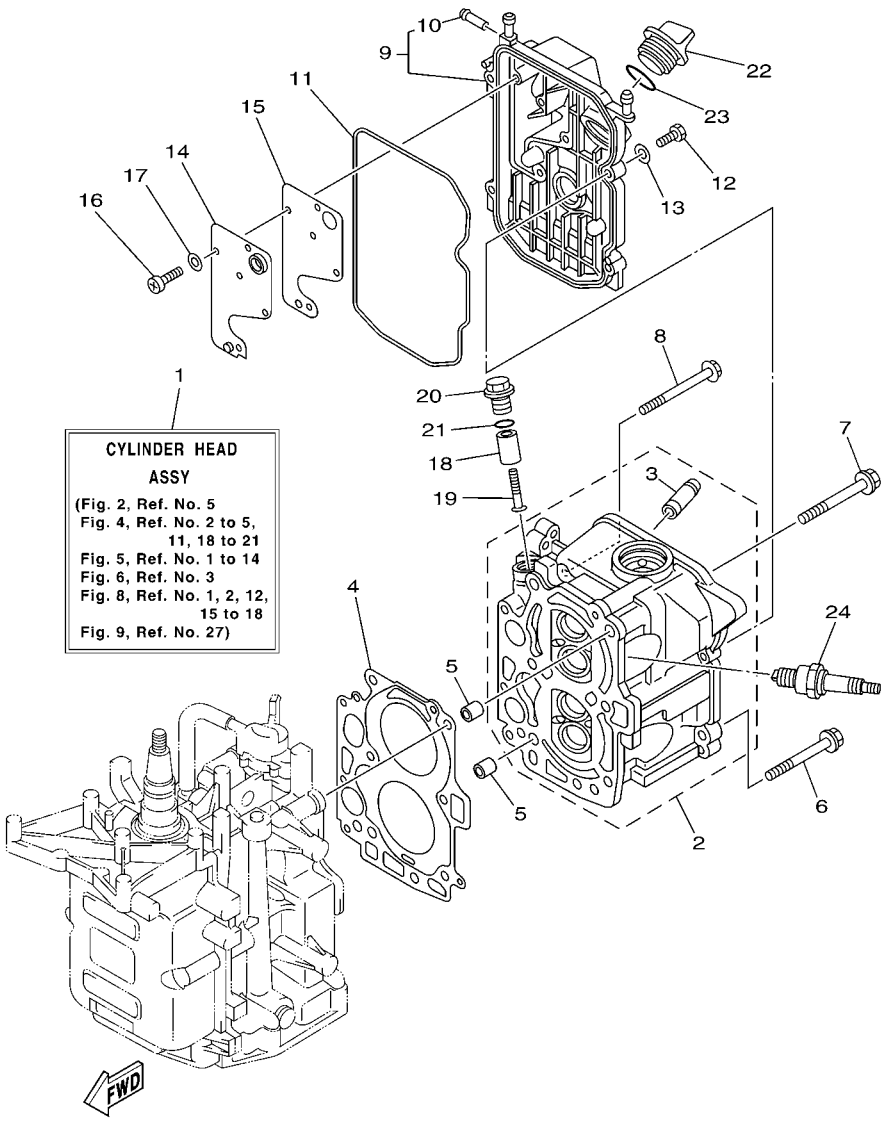

FIG. 4 CYLINDER & CRANKCASE 2 CYLINDRE & CARTER 2

REF. NO.	PART NO. N° PIECES	DESCRIPTION DESCRIPTION	M	E				REMARKS REMARQUES
1	6AU–W009A–01–1S	CYLINDER HEAD ASSY CULASSE (ENS.)	1	1				
2	6AU–11111–00–1S	HEAD, CYLINDER 1 CULASSE	1	1				
3	6AU–11133–10	.GUIDE, VALVE 1 .GUIDE, SOUPAPE 1	4	4				
4	68T–11181–00	GASKET, CYLINDER HEAD 1 JOINT, DE CULASSE 1	1	1				
5	99510–10114	PIN, DOWEL GOUJON, D'ASSEMBLAGE	2	2				
6	90105–08M36	BOLT, FLANGE BOULON	2	2				
7	90105–08M78	BOLT, FLANGE BOULON	4	4				
8	90119–06049	BOLT, WITH WASHER BOULON, AVEC RONDELLE	3	3				
9	68T–11191–00–1S	COVER, CYLINDER HEAD 1 COUVERCLE, CULASSE 1	1	1				
10	650–24378–00	.PIPE, JOINT 4 .DURITE RACCORDEMENT 3	1	1				
11	68T–11356–00	SEAL, CYLINDER 2 JOINT, SPY CYLINDRE	1	1				
12	97095–06020	BOLT BOULON	4	4				
13	92995–06600	WASHER RONDELLE	4	4				
14	68T–11168–00	COVER, BREATHER COUVERCLE, RENIFLARD	1	1				
15	68T–11169–A0	GASKET, BREATHER COVER JOINT, COUVERCLE DE RENIFLARD	1	1				
16	98507–04010	SCREW, PAN HEAD VIS, TETE TRONCONIQUE	5	5				
17	92907–04600	WASHER RONDELLE	5	5				
18	6G8–11325–00	ANODE ANODE	1	1				
19	97880–05025	SCREW, PAN HEAD VIS, TETE TRONCONIQUE	1	1				
20	6G8–11197–01	PLUG, BLIND PLOT, BORGNE	1	1				
21	93210–13M63	O-RING JOINT TORIQUE	1	1				
22	6G8–15363–00	PLUG, OIL PLOT, HUILE	1	1				
23	93210–24M79	O-RING JOINT TORIQUE	1	1				
24	94702–00274	PLUG, SPARK (NGK BR6HS-10) BOUGIE D'ALLUMAGE(NGK BR6HS-10	2	2				

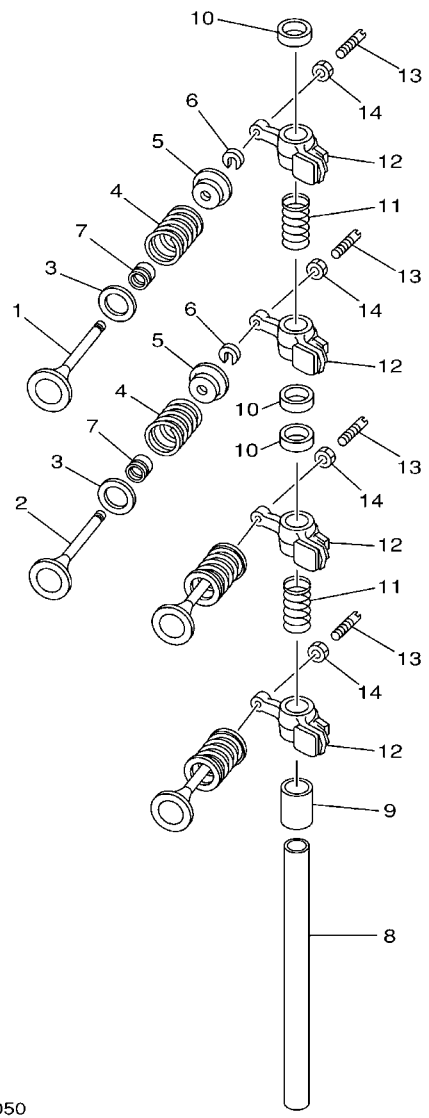

FIG. 5 VALVE SOUPAPE

REF. NO.	PART NO. N° PIECES	DESCRIPTION DESCRIPTION	M	E				REMARKS REMARQUES
1	67D–12111–00	VALVE, INTAKE SOUPAPE, ADMISSION	2	2				
2	67D–12121–00	VALVE, EXHAUST SOUPAPE, ECHAPPEMENT	2	2				
3	68T–12116–00	SEAT, VALVE SPRING SIEGE, RESSORT DE SOUPAPE	4	4				
4	60R–12113–00	SPRING, VALVE INNER RESSORT DE SOUPAPE, INTERNE	4	4				
5	7NJ–12117–00	RETAINER, VALVE SPRING BUTEE DE RESSORT DE SOUPAPE	4	4				
6	7NJ–12118–00	COTTER, VALVE FRAISE, SOUPAPE	4	4				
7	51Y–12119–00	SEAL, VALVE STEM JOINT, QUEUE DE SOUPAPE	4	4				
8	68T–12146–00	SHAFT, ROCKER AXE, CULBUTEUR	1	1				
9	90387–13M56	COLLAR COLLERETTE	1	1				
10	90387–14M03	COLLAR COLLERETTE	3	3				
11	90501–12M40	SPRING, COMPRESSION RESSORT, COMPRESSION	2	2				
12	68T–12151–00	ARM, VALVE ROCKER CULBUTEUR	4	4				
13	6G8–12159–00	SCREW, VALVE ADJUSTING VIS, REGLAGE DE SOUPAPE	4	4				
14	6G8–12158–00	NUT, LOCK CONTRE-ECROU	4	4				

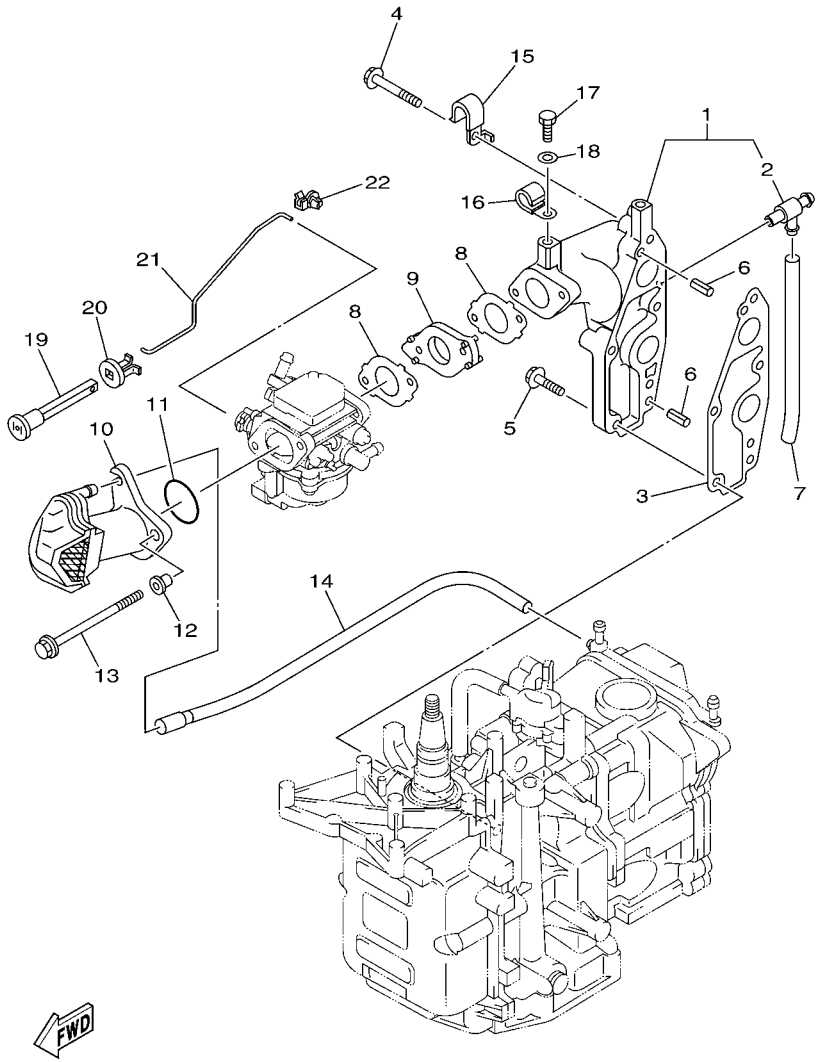

6AU1300-G060

FIG. 6 INTAKE ADMISSION

REF. NO.	PART NO. N° PIECES	DESCRIPTION DESCRIPTION	M	E				REMARKS REMARQUES
1	68T–13641–20–1S	MANIFOLD 1 TUBULURE 1	1	1				FLUSHING KIT FLUSHING KIT
2	67F–12482–00	.PIPE 2 .DURITE 2	1	1				
3	68T–13645–00	GASKET, MANIFOLD 1 JOINT, TUBULURE 1	1	1				
4	90119–06MA5	BOLT, WITH WASHER BOULON, AVEC RONDELLE	3	3				
5	90119–06MA3	BOLT, WITH WASHER BOULON, AVEC RONDELLE	2	2				
6	91690–50014	PIN, SPRING AGRAFFE	2	2				
7	90445–09M20	HOSE (L95) DURITE (L95)	1	1				FLUSHING KIT FLUSHING KIT
8	68T–13646–A0	GASKET, MANIFOLD 2 JOINT, TUBULURE 2	2	2				
9	68T–14271–00	INSULATOR ISOLATEUR	1	1				
10	6AU–14440–00	SILENCER ASSY, INTAKE SIENCIEUX D'ADMISSION	1	1				
11	93210–31MJ5	O-RING JOINT TORIQUE	1	1				
12	90387–06M70	COLLAR COLLERETTE	2	2				
13	97595–06585	BOLT, WITH WASHER VIS HEXAGONAL AVC RONDELLE	2	2				
14	68T–12483–00	PIPE 3 DURITE 3	1	1				
15	90465–08M99	CLAMP BRIDE	1	1				
16	90465–08M83	CLAMP BRIDE	1	1				FLUSHING KIT FLUSHING KIT
17	97095–06010	BOLT BOULON	1					FLUSHING KIT FLUSHING KIT
18	92995–06600	WASHER RONDELLE	1					FLUSHING KIT FLUSHING KIT
19	6H4–41271–01	KNOB, CHOKE BOUTON DE STARTER	1	1				
20	689–41273–00	GROMMET PASSE-FIL	1	1				
21	68T–41256–00	ROD, CHOKE 1 TRINGLE 1, STARTER	1	1				
22	6J8–41262–00	JOINT, CHOKE LEVER RACCORD, LEVIER DE STARTER	1	1				

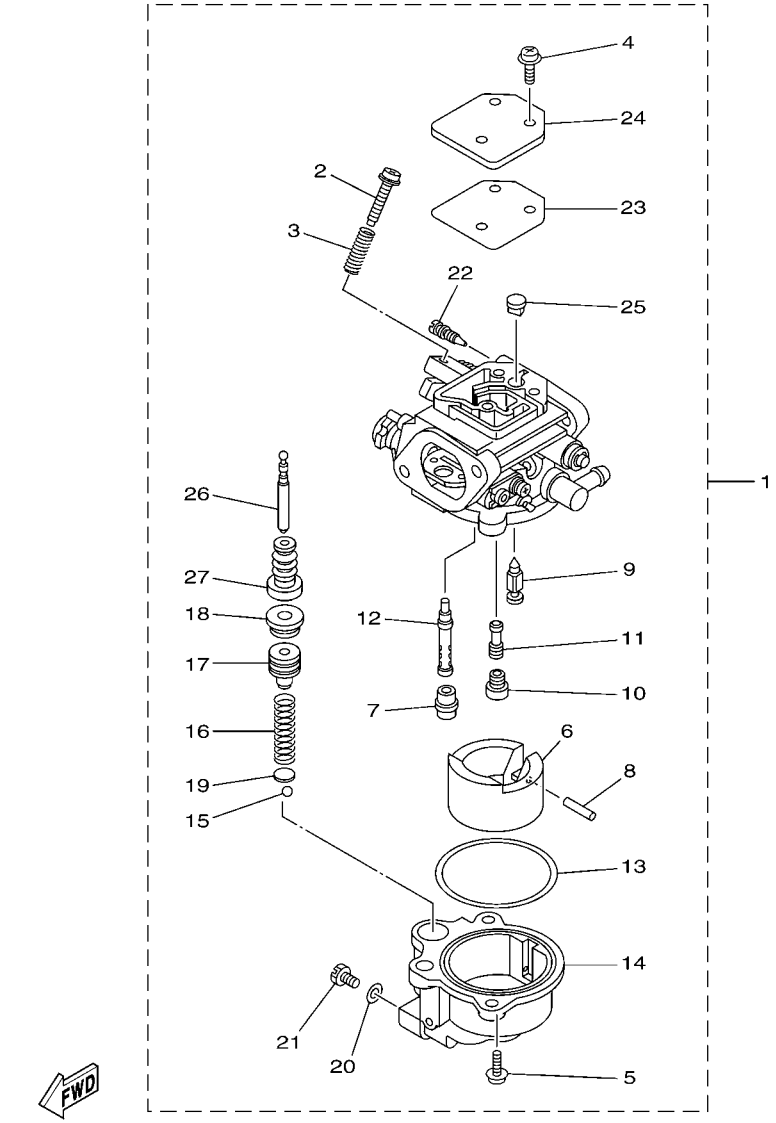

6AU3300-J070

FIG. 7 CARBURETOR CARBURATEUR

REF. NO.	PART NO. N° PIECES	DESCRIPTION DESCRIPTION	M	E				REMARKS REMARQUES
1	6AU–14301–21	CARBURETOR ASSY 1 CARBURATEUR COMPLET 1	1					
	6AU–14301–51	CARBURETOR ASSY 1 CARBURATEUR COMPLET 1		1				
2	6E5–14321–00	.SCREW, THROTTLE .VIS, ACCELERATEUR	1	1				
3	6J8–14334–00	.SPRING, THROTTLE .RESSORT, ACCELERATEUR	1	1				
4	97980–04110	.SCREW, WITH WASHER .VIS, AVEC RONDELLE	3	3				
5	97980–04112	.SCREW, WITH WASHER .VIS, AVEC RONDELLE	2	2				
6	6AU–14385–00	.FLOAT .FLOTTEUR	1	1				
7	67D–14966–00	.RUBBER CAP .CAOUTCHOUC CASQUILLO	1	1				
8	67D–14386–00	.PIN, FLOAT .AXE, FLOTTEUR	1	1				
9	68T–14546–00	.VALVE, NEEDLE .POINTEAU	1	1				
10	6AU–1492E–43	.JET, MAIN (#86) .GICLEUR, PRINCIPAL (#86)	1	1				
11	6AU–1492F–20	.JET, AIR SLOW (#40) .GICLEUR, AIR (#40)	1	1				
12	6AU–1492A–00	.NOZZLE, MAIN .PUITS D'AIGUILLE	1	1				
13	6AU–14984–00	.GASKET, FLOAT CHAMBER .JOINT, CUVE DE FLOTTEUR	1	1				
14	6AU–14982–50	.HOLDER .SUPPORT	1	1				
15	6AU–1431B–00	.BALL .BILLE	1	1				
16	6AU–14335–50	.SPRING, PLUNGER .RESSORT, PLONGEUR	1	1				
17	6AU–14371–50	.PLUNGER, STARTER .PLONGEUR, STARTER	1	1				
18	6AU–1431A–30	.GUIDE .GUIDE	1	1				
19	6AU–14918–00	.RING .BAGUE	1	1				
20	6J8–14959–00	.GASKET .JOINT	1	1				
21	66T–14991–00	.PLUG, DRAIN .BOUCHON DE VIDANGE	1	1				
22	68T–14323–20	.SCREW, AIR ADJUSTING .VIS DE DOSEUR D'AIR	1	1				
23	67D–14536–00	.GASKET .JOINT	1	1				
24	67D–14527–00	.PLATE .PLAQUE	1	1				
25	68T–14126–00	.PLUG .PLOT	1	1				
26	6AU–14379–30	.ROD, STARTER .TRINGLE, STARTER	1	1				

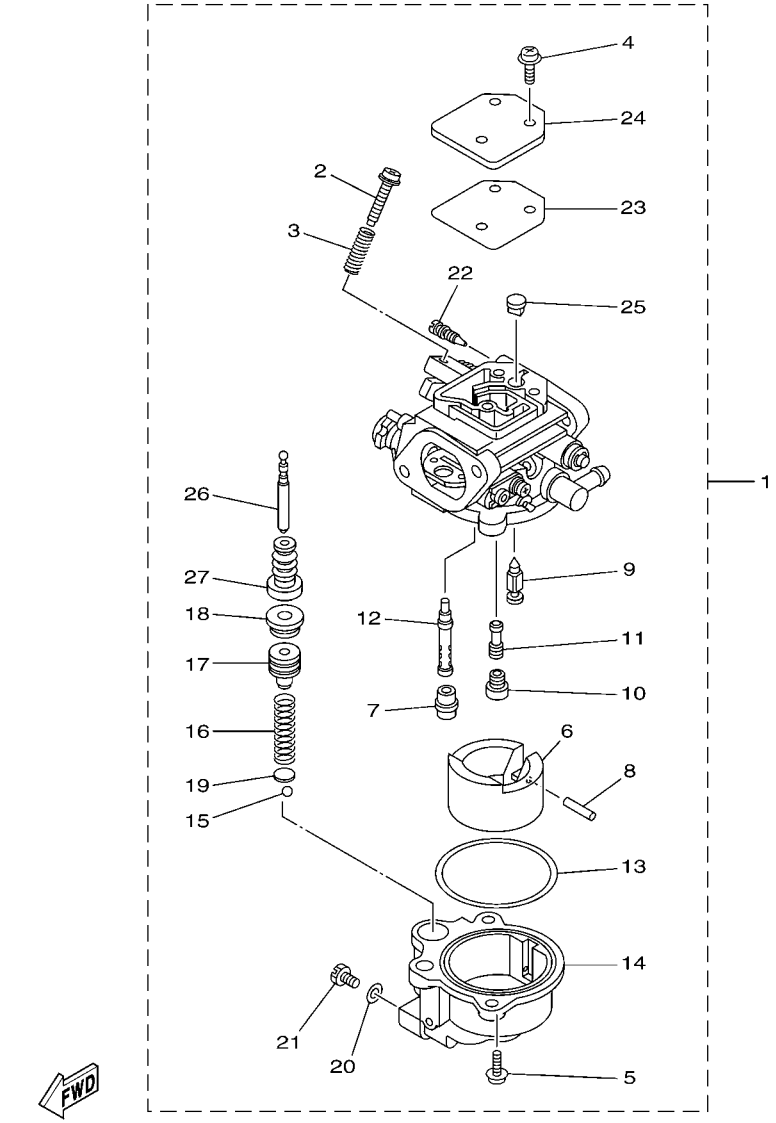

6AU3300-J070

FIG. 7 CARBURETOR CARBURATEUR

REF. NO.	PART NO. N° PIECES	DESCRIPTION DESCRIPTION	M	E				REMARKS REMARQUES
27	6AU–14373–00	.COVER, PLUNGER CAP .COUVERCLE DE PLONGEUR	1	1				

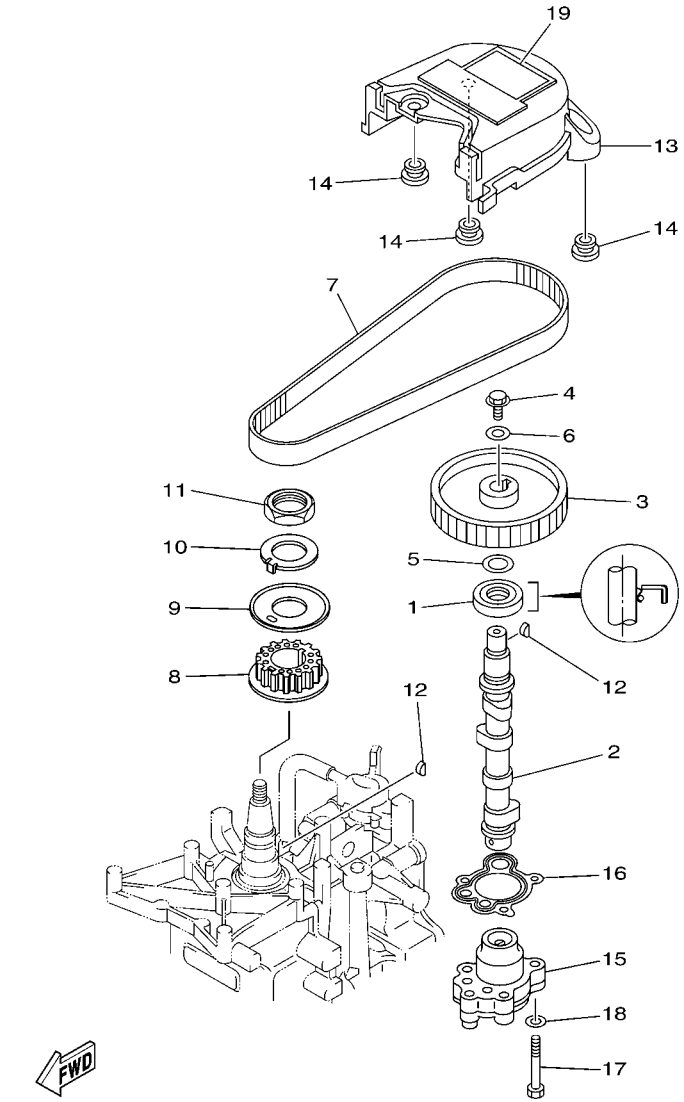

60S1300-D080

FIG. 8 OIL PUMP — POMPE A HUILE

REF. NO.	PART NO. N° PIECES	DESCRIPTION DESCRIPTION	M	E				REMARKS REMARQUES
1	93102–18M21	OIL SEAL JOINT SPY	1	1				
2	68T–12171–00	CAMSHAFT 1 ARBRE A CAMES 1	1	1				
3	66M–11537–00–94	GEAR, DRIVEN PIGNON SECONDAIRE	1	1				
4	90105–06M14	BOLT FLANGE BOULON	1	1				
5	90201–13201	WASHER, PLATE RONDELLE, PLATE	1	1				
6	90201–06M94	WASHER, PLATE RONDELLE, PLATE	1	1				
7	68T–46241–00	V-BELT COURROIE TRAPEZOIDALE	1	1				
8	68T–11536–00	GEAR, DRIVE ENGRENAGE, MENANT	1	1				
9	68T–11557–00	WASHER 1 RONDELLE 1	1	1				
10	6G8–11587–01	WASHER, LOCK RONDELLE, FREIN	1	1				
11	90170–24M09	NUT ECROU	1	1				
12	90280–03M01	KEY, WOODRUFF CLAVETTE, DEMI-LUNE	2	2				
13	6AU–46297–00	COVER, DUST COUVERCLE, POUSSIERE	1	1				
14	90480–10627	GROMMET PASSE-FIL	3	3				
15	68T–13300–00	OIL PUMP ASSY POMPE A HUILE COMPLETE	1	1				
16	68T–13329–00	GASKET, PUMP COVER JOINT, COUVERCLE DE POMPE	1	1				
17	97095–06030	BOLT BOULON	3	3				
18	92995–06600	WASHER RONDELLE	3	3				
19	6G9–12138–60	MARK, CAUTION MAKER	1	1				

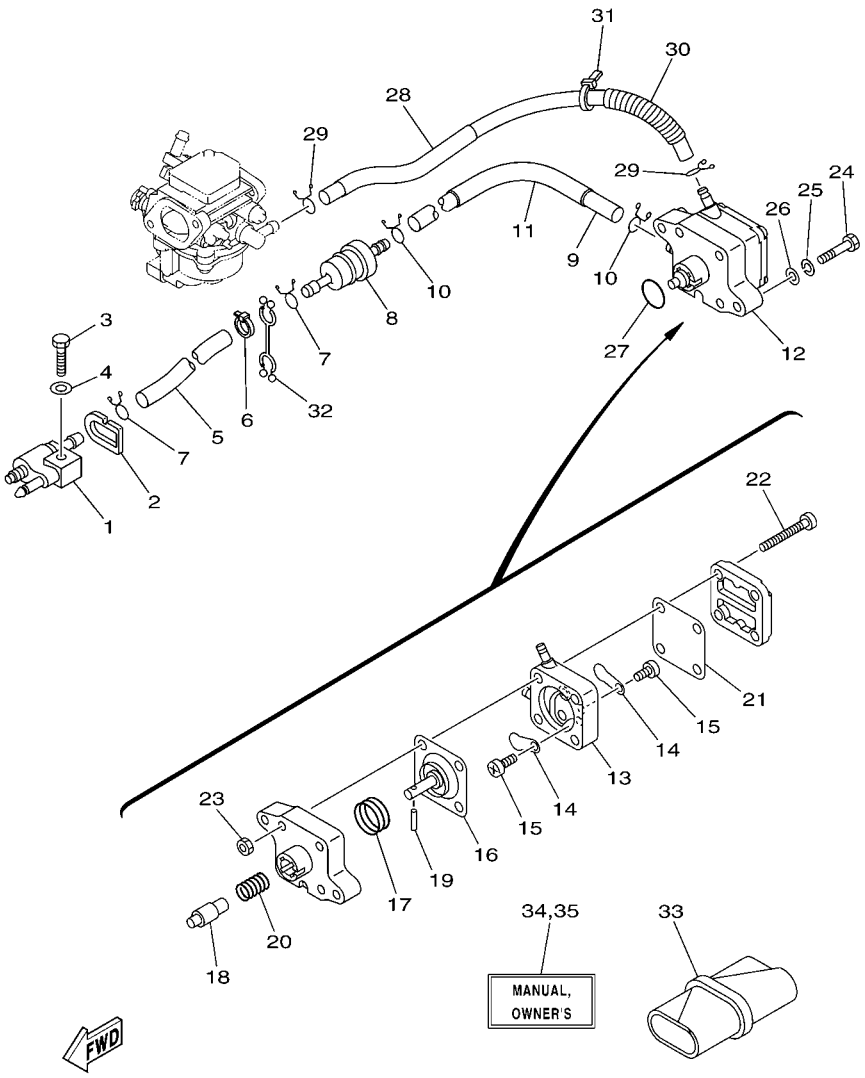

FIG. 9 FUEL CARBURANT

REF. NO.	PART NO. N° PIECES	DESCRIPTION DESCRIPTION	M	E				REMARKS REMARQUES
1	6G1–24304–02	FUEL PIPE JOINT COMP. 1 DURITE RACCORDEMT. A ESSENCE	1	1				
2	61N–24329–00	SEAL JOINT	1	1				
3	97095–06025	BOLT BOULON	1	1				
4	92995–06600	WASHER RONDELLE	1	1				
5	90445–10046	HOSE (L295) DURITE (L295)	1	1				
6	90465–11M10	CLAMP BRIDE	1	1				
7	90467–09M09	CLIP JONC	2	2				
8	68T–24251–01	STRAINER 1 FILTRE 1	1	1				
9	90445–10M50	HOSE (L170) DURITE (L170)	1	1				
10	90467–09M09	CLIP JONC	2	2				
11	90445–16010	HOSE (L140) DURITE (L140)	1	1				
12	68T–24410–01	FUEL PUMP ASSY POMPE A ESSENCE	1	1				
13	66M–24413–01	.BODY 2 .CORPS 2	1	1				
14	6A0–24421–01	.VALVE, CHECK .SOUPAPE, RETENUE	2	2				
15	6E7–14325–00	.SCREW, PAN HEAD .VIS TETE CONIQUE	2	2				
16	66M–24411–01	.DIAPHRAGM .DIAPHRAGME	1	1				
17	66M–24423–00	.SPRING, DIAPHRAGM .RESSORT, DIAPHRAGME	1	1				
18	66M–13131–00	.PLUNGER .PLONGEUR	1	1				
19	66M–24374–00	.PIN .GOUPILLE	1	1				
20	66M–24454–00	.SPRING .RESSORT	1	1				
21	66M–24471–01	.DIAPHRAGM .DIAPHRAGME	1	1				
22	66M–24444–00	.SCREW .VIS	4	4				
23	95380–04600	.NUT .ECROU	4	4				
24	97095–06030	BOLT BOULON	2	2				
25	92995–06100	WASHER, SPRING RONDELLE, GROWER	2	2				
26	92995–06600	WASHER RONDELLE	2	2				
27	93210–20M65	O-RING JOINT TORIQUE	1	1				

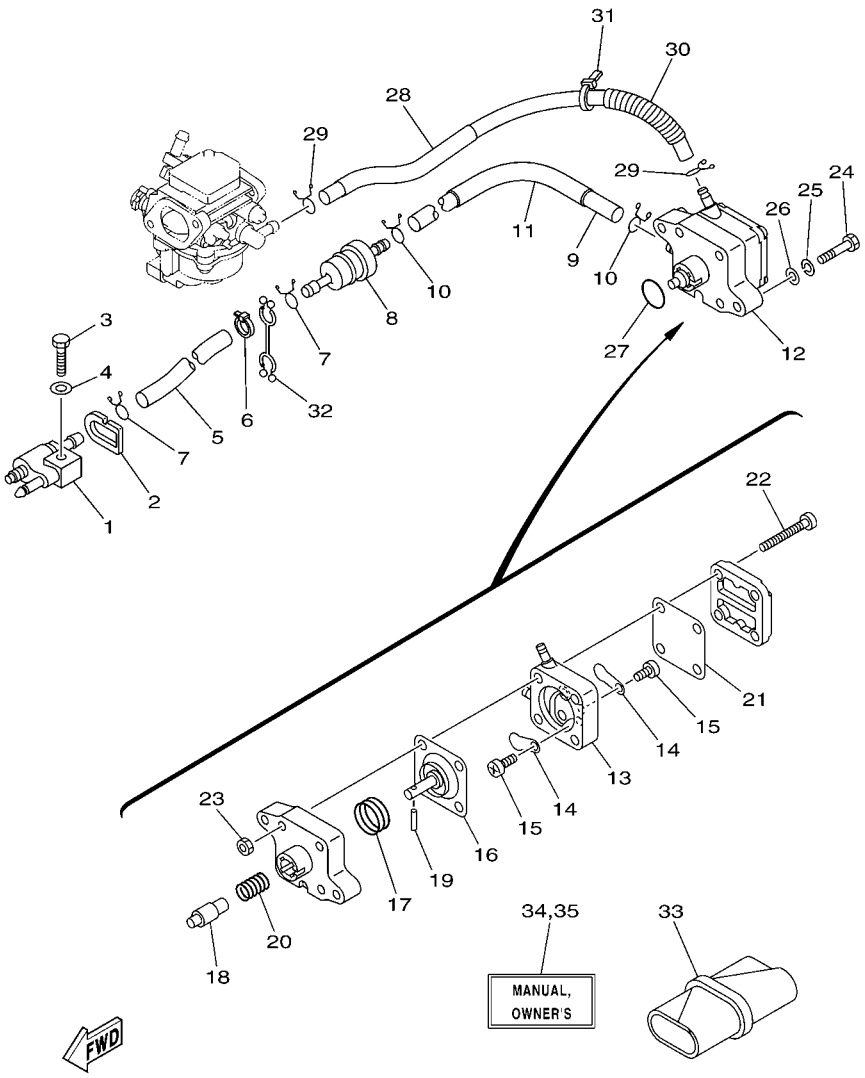

FIG. 9 FUEL CARBURANT

REF. NO.	PART NO. N° PIECES	DESCRIPTION DESCRIPTION	M	E				REMARKS REMARQUES
28	6AU–24311–00	PIPE, FUEL 1 DURITE A ESSENCE	1	1				
29	90467–09M09	CLIP JONC	2	2				
30	90446–14M66	HOSE (L40) DURITE (L40)	1	1				
31	90465–11M10	CLAMP BRIDE	1	1				
32	90464–10M53	CLAMP BRIDE	1	1				
33	68T–28100–00	TOOL KIT TROUSSE A OUTILS	1	1				
34	6AU–28199–73–E0	MANUAL,OWNER'S MANUEL D'UTILISATION	1	1				UR (E) UR (E)
	6AU–28199–73–F0	MANUAL,OWNER'S MANUEL D'UTILISATION	1	1				UR (F) UR (F)
	6AU–28199–73–S0	MANUAL,OWNER'S MANUEL D'UTILISATION	1	1				UR (ES) UR (ES)
	6AU–28199–73–G0	MANUAL,OWNER'S MANUEL D'UTILISATION	1	1				UR (D) UR (D)
	6AU–28199–73–D0	MANUAL,OWNER'S MANUEL D'UTILISATION	1	1				UR (NL) UR (NL)
	6AU–28199–73–H0	MANUAL,OWNER'S MANUEL D'UTILISATION	1	1				UR (I) UR (I)
35	6AU–28199–83–K0	MANUAL,OWNER'S MANUEL D'UTILISATION	1	1				UR (DK) UR (DK)
	6AU–28199–83–R0	MANUAL,OWNER'S MANUEL D'UTILISATION	1	1				UR (GR) UR (GR)
	6AU–28199–83–P0	MANUAL,OWNER'S MANUEL D'UTILISATION	1	1				UR (P) UR (P)
	6AU–28199–83–N0	MANUAL,OWNER'S MANUEL D'UTILISATION	1	1				UR (N) UR (N)
	6AU–28199–83–M0	MANUAL,OWNER'S MANUEL D'UTILISATION	1	1				UR (S) UR (S)
	6AU–28199–83–L0	MANUAL,OWNER'S MANUEL D'UTILISATION	1	1				UR (SF) UR (SF)

FIG. 10 STARTER DEMARREUR

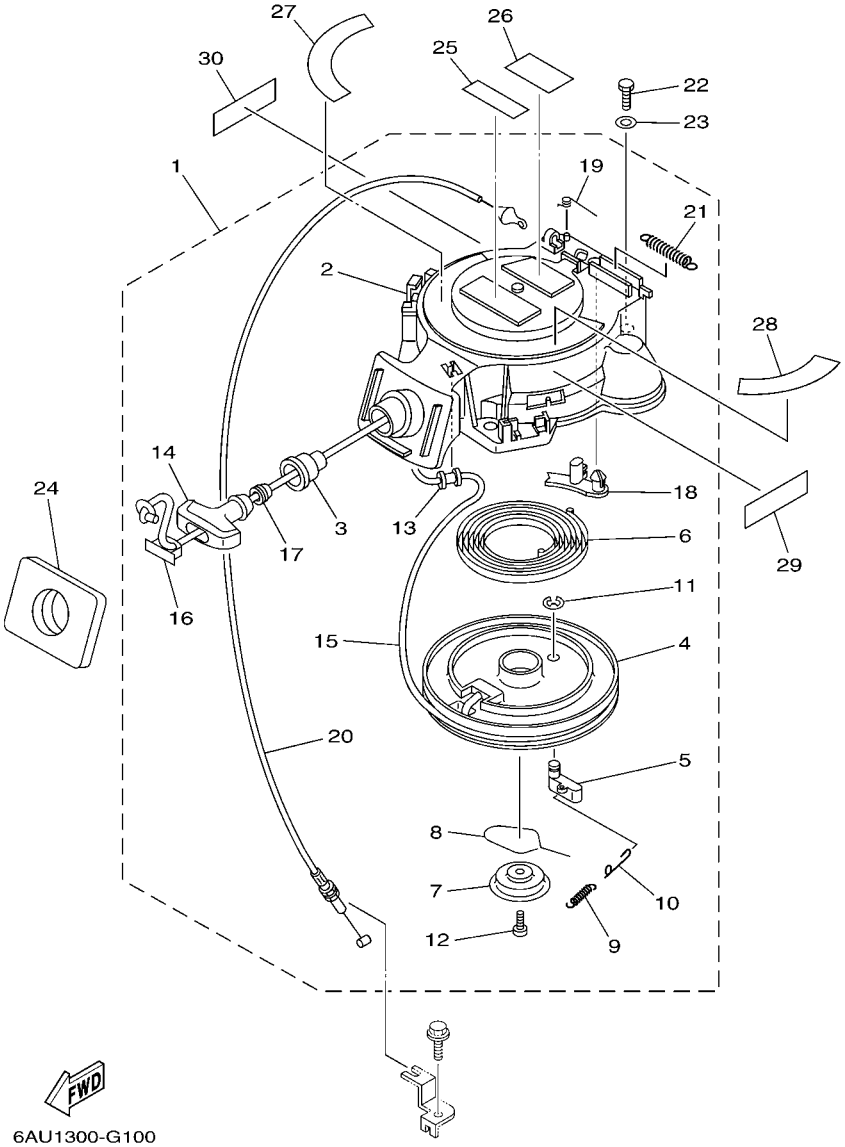

*1:CUT FROM 50M ROLLS,PART NO.90890-44373,CUTTING LENGTH 1.8M

*1:A PRELEVER SUR BOBINE 50M ,REFERENCE 90890-44373,
LONGUEUR DE COUPE 1.8M

REF. NO.	PART NO. N° PIECES	DESCRIPTION DESCRIPTION	M	E				REMARKS REMARQUES
1	68T–15710–13	STARTER ASSY DEMARREUR COMPLET	1					
2	68T–15711–03	.CASE, STARTER .CARTER DE DEMARREUR	1					
3	68T–15795–00	.GUIDE, ROPE .GUIDE DE CABLE	1					
4	63V–15714–00	.DRUM, SHEAVE .TAMBOUR, POULIE	1					
5	63V–15741–00	.PAWL, DRIVE .CLIQUET, ENTRAINEMENT	1					
6	63V–15713–00	.SPRING, STARTER .RESSORT DE DEMARREUR	1					
7	68T–15716–00	.PLATE, DRIVE .PLAQUE, ENTRAINEMENT	1					
8	63V–15705–01	.SPRING, DRIVE PAWL .RESSORT DE CLIQUET	1					
9	63V–15767–01	.SPRING .RESSORT	1					
10	68T–15784–00	.SPRING, RETURN .RESSORT, RAPPEL	1					
11	63V–15744–00	.CIRCLIP .CIRCLIP	1					
12	68T–15793–00	.SCREW .VIS	1					
13	68T–15764–00	.COLLAR 1 .COLLERETTE 1	1					
14	6G1–15755–00	.HANDLE, STARTER .POIGNEE, DE DEMARREUR	1					
15	*	.WIRE, STARTER (L:1800MM) .CABLE DE DEMARREUR (L:1800MM)	1					*1 *1
16	6G1–15779–00	.COVER .COUVERCLE	1					
17	6A0–15789–00	.DAMPER .AMORTISSEUR	1					
18	68T–15794–00	.STOPPER .BUTEE	1					
19	66T–15734–00	.SPRING, RETURN .RESSORT, RAPPEL	1					
20	68T–15770–00	.CABLE COMP., STARTER STOP .CABLE, BUTEE DE DEMAR	1					
21	66T–15731–00	.SPRING, RETURN .RESSORT, RAPPEL	1					
22	97095–06020	BOLT BOULON	3					
23	92995–06600	WASHER RONDELLE	3					
24	68T–15762–00	SEAL, RUBBER 2 JOINT CAOUTCHOUC 2	1					
25	6AH–81995–40	LABEL, WARNING ETIQUETTE, AVERTISSEMENT	1					
26	6AH–81995–50	LABEL, WARNING ETIQUETTE, AVERTISSEMENT	1					
27	6AU–13437–60	MARK, CAUTION MAKER	1					

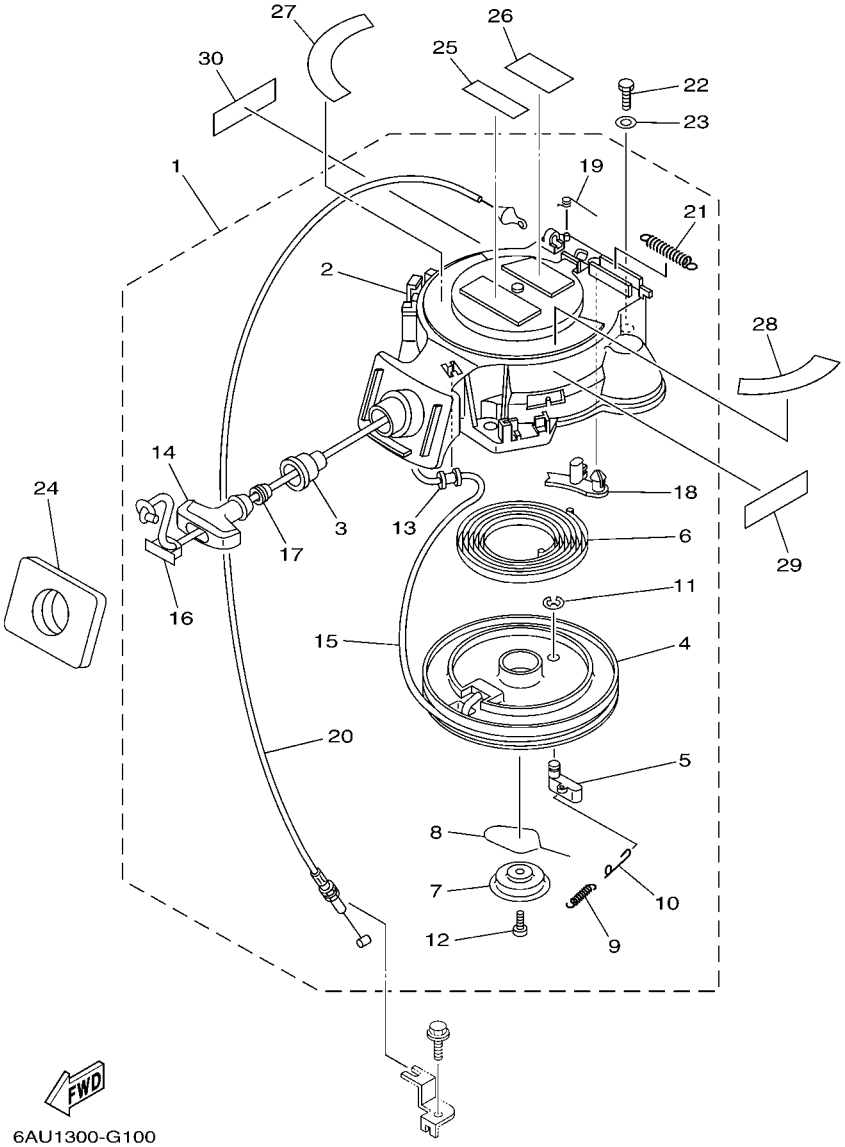

*1:CUT FROM 50M ROLLS,PART NO.90890-44373,CUTTING LENGTH 1.8M

*1:A PRELEVER SUR BOBINE 50M ,REFERENCE 90890-44373,
LONGUEUR DE COUPE 1.8M

FIG. 10 STARTER DEMARREUR

REF. NO.	PART NO. N° PIECES	DESCRIPTION DESCRIPTION	M	E				REMARKS REMARQUES
28	68T–85711–60	MARK, CAUTION MAKER	1					
29	6AH–81994–40	LABEL, SAFETY ETIQUETTE, SECURITE	1					
30	6AH–81994–50	LABEL, SAFETY ETIQUETTE, SECURITE	1					

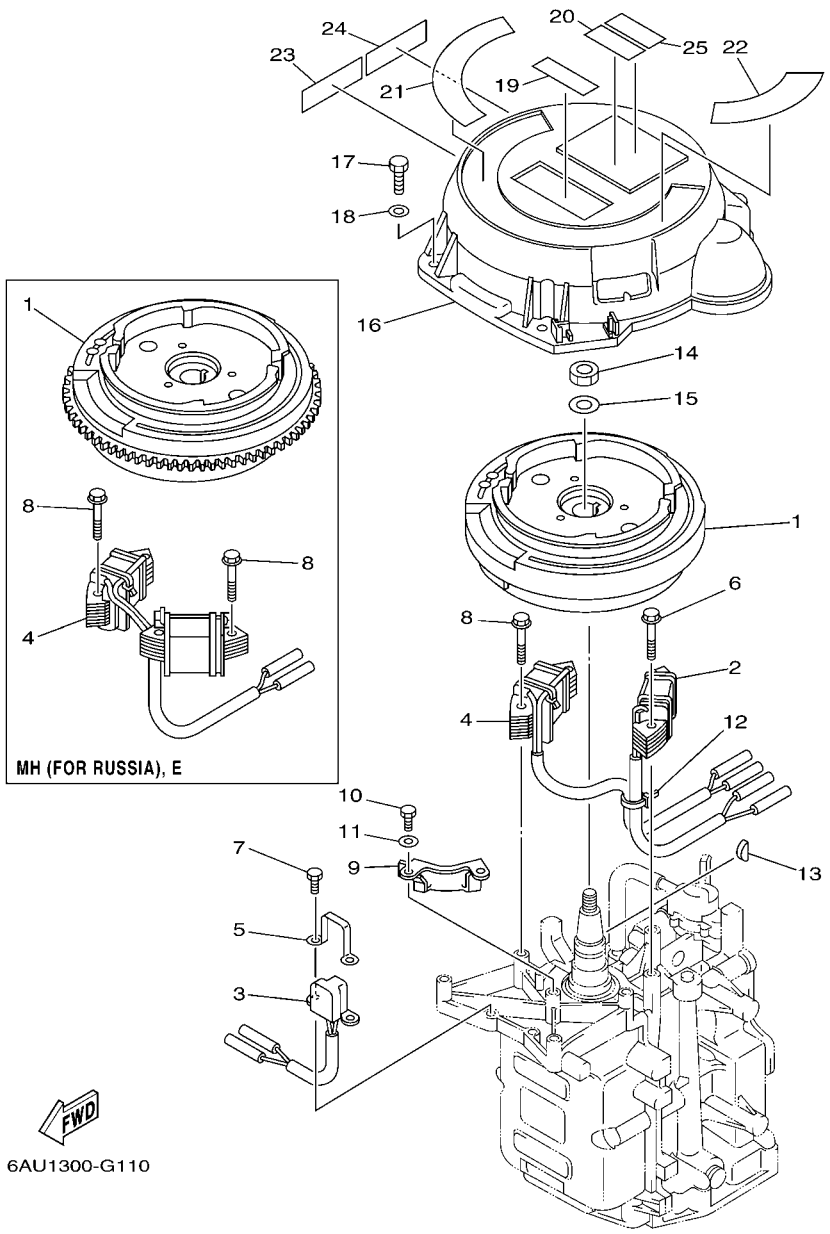

FIG. 11 GENERATOR GENERATRICE

REF. NO.	PART NO. N° PIECES	DESCRIPTION DESCRIPTION	M	E				REMARKS REMARQUES
1	68T–85550–01	ROTOR ASSY ROTOR CPLT	1					
	68T–85550–11	ROTOR ASSY ROTOR CPLT	1	1				MH-FOR RUS MH-FOR RUS
2	68T–85520–00	COIL, CHARGE BOBINE, CHARGE	1	1				
3	68T–85580–01	COIL, PULSER BOBINE, PULSEUR	1	1				
4	68T–85533–00	COIL, LIGHTING BOBINE, ECLAIRAGE	1					
	68T–85533–10	COIL, LIGHTING BOBINE, ECLAIRAGE	1	1				MH-FOR RUS MH-FOR RUS
5	6H2–85582–00	ATTACHMENT, PULSER SUPPORT, PULSEUR	1	1				
6	90119–06014	BOLT, WITH WASHER BOULON, AVEC RONDELLE	2	2				
7	97095–05010	BOLT BOULON	2	2				
8	90119–06MA1	BOLT, WITH WASHER BOULON, AVEC RONDELLE	2					
	90119–06MA1	BOLT, WITH WASHER BOULON, AVEC RONDELLE	4	4				MH-FOR RUS MH-FOR RUS
9	68T–81328–00	CLAMP COLLIER	1					EXCEPT FOR RUS EXCEPT FOR RUS
10	97013–06012	BOLT BOULON	2					EXCEPT FOR RUS EXCEPT FOR RUS
11	92903–06600	WASHER, PLATE RONDELLE, PLATE	2					EXCEPT FOR RUS EXCEPT FOR RUS
12	90465–11M10	CLAMP BRIDE	1	1				
13	90280–04M06	KEY, WOODRUFF CLAVETTE, DEMI-LUNE	1	1				
14	90170–12066	NUT ECROU	1	1				
15	90201–12472	WASHER, PLATE RONDELLE, PLATE	1	1				
16	6AV–81337–00	COVER, FLYWHEEL COUVERCLE, VOLANT		1				
17	97095–06020	BOLT BOULON		3				
18	92995–06600	WASHER RONDELLE		3				
19	6AH–81995–40	LABEL, WARNING ETIQUETTE, AVERTISSEMENT		1				
20	6AH–81995–50	LABEL, WARNING ETIQUETTE, AVERTISSEMENT		1				
21	6AU–13437–60	MARK, CAUTION MAKER		1				
22	68T–85711–60	MARK, CAUTION MAKER		1				
23	6AH–81994–40	LABEL, SAFETY ETIQUETTE, SECURITE		1				
24	6AH–81994–50	LABEL, SAFETY ETIQUETTE, SECURITE		1				

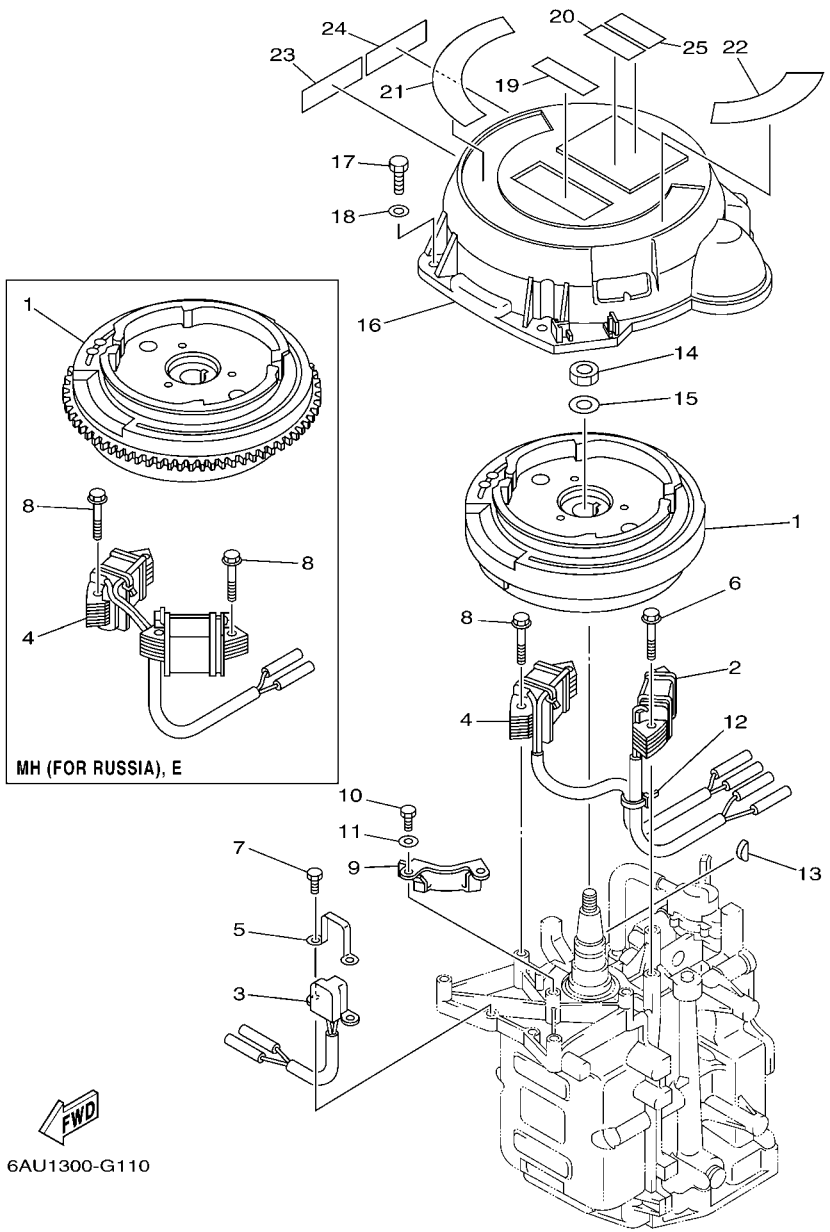

FIG. 11 GENERATOR GENERATRICE

REF. NO.	PART NO. N° PIECES	DESCRIPTION DESCRIPTION	M	E				REMARKS REMARQUES
25	6AG–81996–00	MARK MARQUE		1				

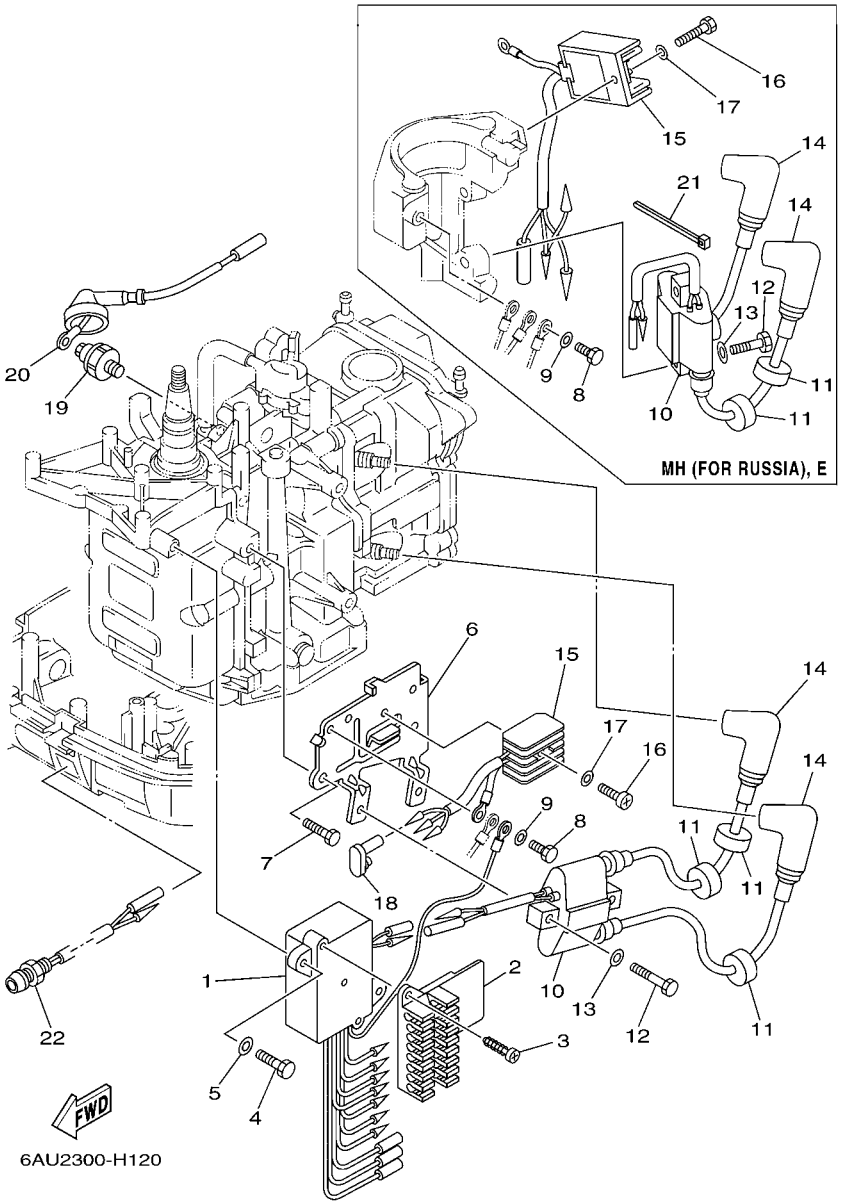

FIG. 12 ELECTRICAL 1 — PARTIE ELECTRIQUE 1

REF. NO.	PART NO. N° PIECES	DESCRIPTION DESCRIPTION	M	E				REMARKS REMARQUES
1	68T–85540–00	C.D.I. UNIT ASSY BLOC C.D.I.	1	1				
2	68T–82522–00	CLAMP, COUPLER BRIDE, DE CONNECTEUR	1	1				
3	97780–40512	SCREW, TAPPING VIS, TETE BOMBEE	2	2				
4	97095–06020	BOLT BOULON	2	2				
5	92995–06600	WASHER RONDELLE	2	2				
6	68T–85542–00	BRACKET SUPPORT	1					EXCEPT FOR RUS EXCEPT FOR RUS
7	97095–08012	BOLT BOULON	2					EXCEPT FOR RUS EXCEPT FOR RUS
8	97095–06012	BOLT BOULON	1	1				
9	92995–06600	WASHER RONDELLE	1	1				
10	680–85570–02	IGNITION COIL ASSY BOBINE D'ALLUMAGE (ENS.)	1	1				
11	90480–25003	GROMMET PASSE-FIL	3	3				
12	97095–06025	BOLT BOULON	2	2				
13	92995–06600	WASHER RONDELLE	2	2				
14	6E3–82370–21	PLUG CAP ASSY ANTIPARASITE	2	2				
15	664–81970–62	RECTIFIER ASSY REDRESSEUR COMPLET	1					EXCEPT FOR RUS EXCEPT FOR RUS
	68T–81960–00	RECTIFIER & REGULATOR ASSY REDRESSEUR REGULATEUR CPLT	1	1				MH-FOR RUS MH-FOR RUS
16	97880–05025	SCREW, PAN HEAD VIS, TETE TRONCONIQUE	1					EXCEPT FOR RUS EXCEPT FOR RUS
	97095–06012	BOLT BOULON	1	1				MH-FOR RUS MH-FOR RUS
17	92990–05600	WASHER, PLATE RONDELLE, PLATE	1					EXCEPT FOR RUS EXCEPT FOR RUS
	92995–06600	WASHER RONDELLE	1	1				MH-FOR RUS MH-FOR RUS
18	6A0–82119–00	COVER, LEAD WIRE GARNITURE, FIL	1					EXCEPT FOR RUS EXCEPT FOR RUS
19	67F–82504–00	OIL PRESSURE SWITCH ASSY CONTACTEUR DE PRESSION D'HUILE	1	1				
20	68T–82127–10	WIRE, LEAD 2 FIL 2	1	1				
21	90465–11M10	CLAMP BRIDE	1	1				MH-FOR RUS MH-FOR RUS
22	68T–85410–00	EMERGENCY SIGNAL LIGHT ASSY FEU DE DETRESSE	1	1				

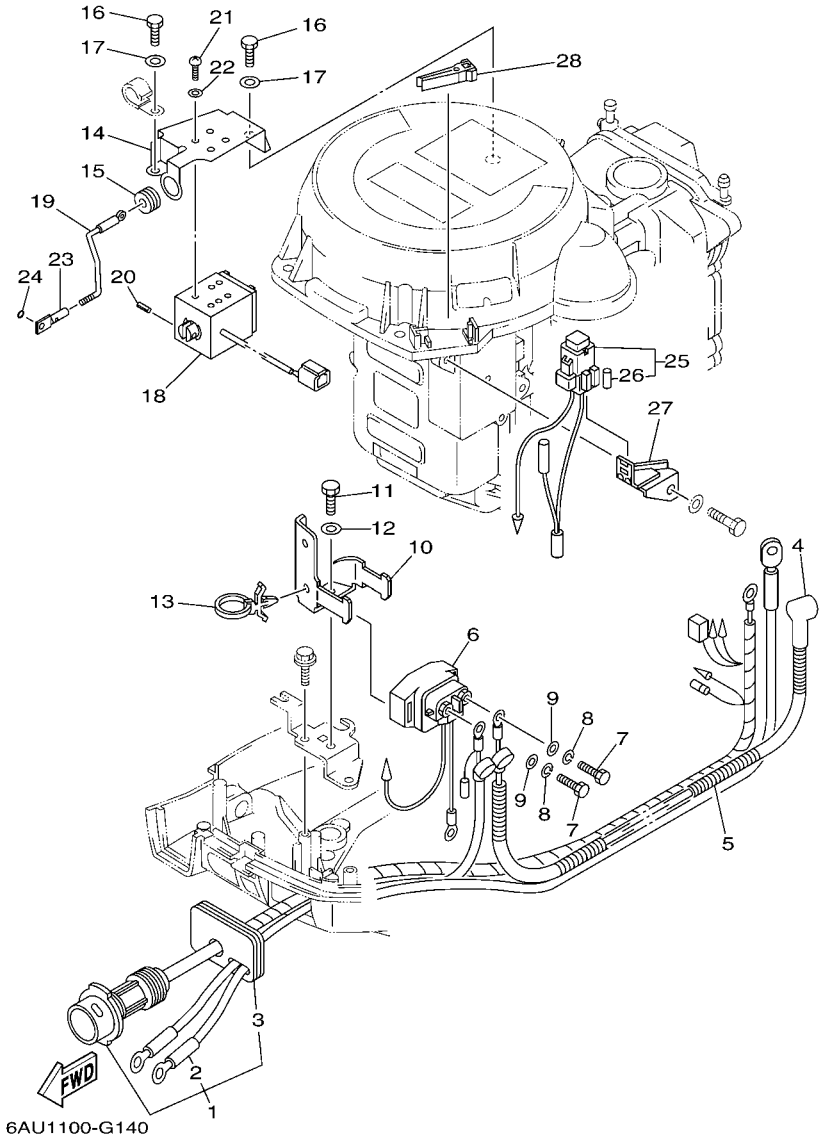

FIG. 13 ELECTRICAL 2 — PARTIE ELECTRIQUE 2

REF. NO.	PART NO. N° PIECES	DESCRIPTION DESCRIPTION	M	E				REMARKS REMARQUES
1	69G–82580–00	WIRE HARNESS ASSY 2 FAISCEAU DE FILS 2 CPLT		1				
2	69G–82105–00	.WIRE HARNESS (L: 3.0M) .FAISCEAU DE FILS (L: 3.0M)		1				
3	68T–42724–40	.GROMMET .PASSE-FIL		1				
4	6G8–82117–00	WIRE, LEAD FIL		1				
5	90446–10M86	HOSE (L140) DURITE (L140)		1				
6	68T–81940–00	STARTER RELAY ASSY LANCEUR RELAIS (ENS.)		1				
7	97095–06010	BOLT BOULON		2				
8	92995–06100	WASHER, SPRING RONDELLE, GROWER		2				
9	92995–06600	WASHER RONDELLE		2				
10	68T–81945–01	PLATE, SWITCH FITTING PLAQUE, FIXATION DU RELAIS		1				
11	97095–06012	BOLT BOULON		1				
12	92995–06600	WASHER RONDELLE		1				
13	90465–12M56	CLAMP BRIDE		1				
14	68T–86112–00	STAY, SOLENOID SUPPORT, SOLENOIDE		1				
15	90480–13018	GROMMET PASSE-FIL		1				
16	97095–06012	BOLT BOULON		2				
17	92995–06600	WASHER RONDELLE		2				
18	68T–86111–00	COIL, SOLENOID BOBINE		1				
19	68T–41237–00	JOINT, LINK RACCORD		1				
20	91690–30010	PIN, SPRING AGRAFFE		1				
21	97880–04008	SCREW, PAN HEAD VIS, TETE TRONCONIQUE		4				
22	92990–04600	WASHER, PLATE RONDELLE, PLATE		4				
23	68T–86117–00	HOOK, WIRE PULL CROCHET, TENSION DE CABLE		1				
24	93210–03261	O-RING JOINT TORIQUE		1				
25	68T–82150–00	FUSE HOLDER ASSY SUPPORT DE FUSIBLE		1				
26	66V–82151–00	.FUSE (10A-BL) .FUSIBLE (10A-BL)		2				
27	68T–82171–01	STAY, FUSE BOX SUPPORT, BOITE A FUSIBLES		1				

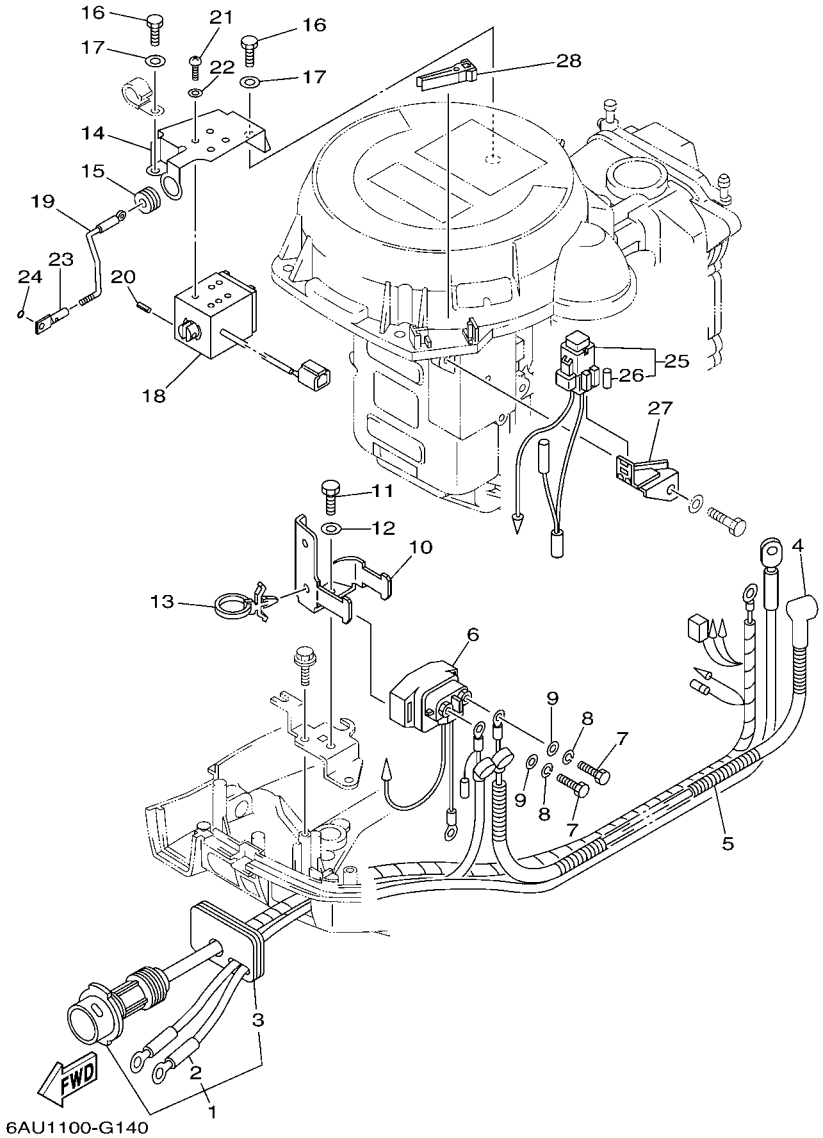

FIG. 13 ELECTRICAL 2 — PARTIE ELECTRIQUE 2

REF. NO.	PART NO. N° PIECES	DESCRIPTION DESCRIPTION	M	E				REMARKS REMARQUES
28	67F–2812A–00	PULLER, FUSE TENDEUR, FUSIBLE		1				

FIG. 14 ELECTRICAL 3 PARTIE ELECTRIQUE 3

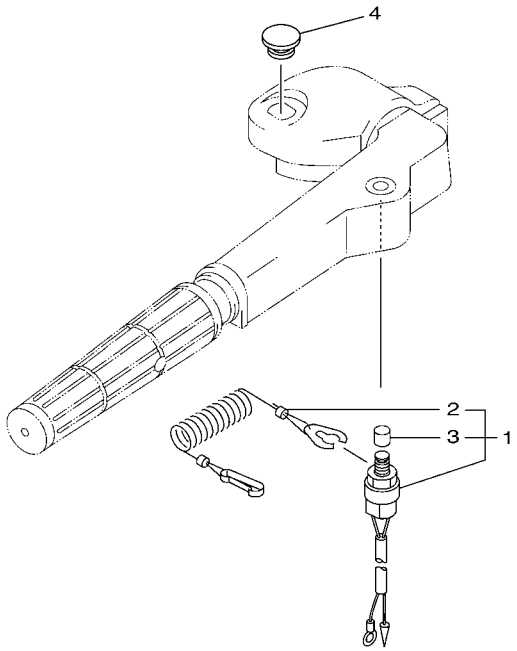

6AU1300-G140

REF. NO.	PART NO. N° PIECES	DESCRIPTION DESCRIPTION	M	E				REMARKS REMARQUES
1	65W–82575–01	ENGINE STOP SWITCH ASSY COUPE CIRCUIT CPLT	1					
2	682–82556–00	.LANYARD, STOP SWITCH .PLAQUETTE	1					
3	689–8257Y–00	.CAP .COUVERCLE	1					
4	6G1–42725–00	GROMMET PASSE-FIL	1					

FIG. 15 STARTING MOTOR DEMARREUR ELECTRIQUE

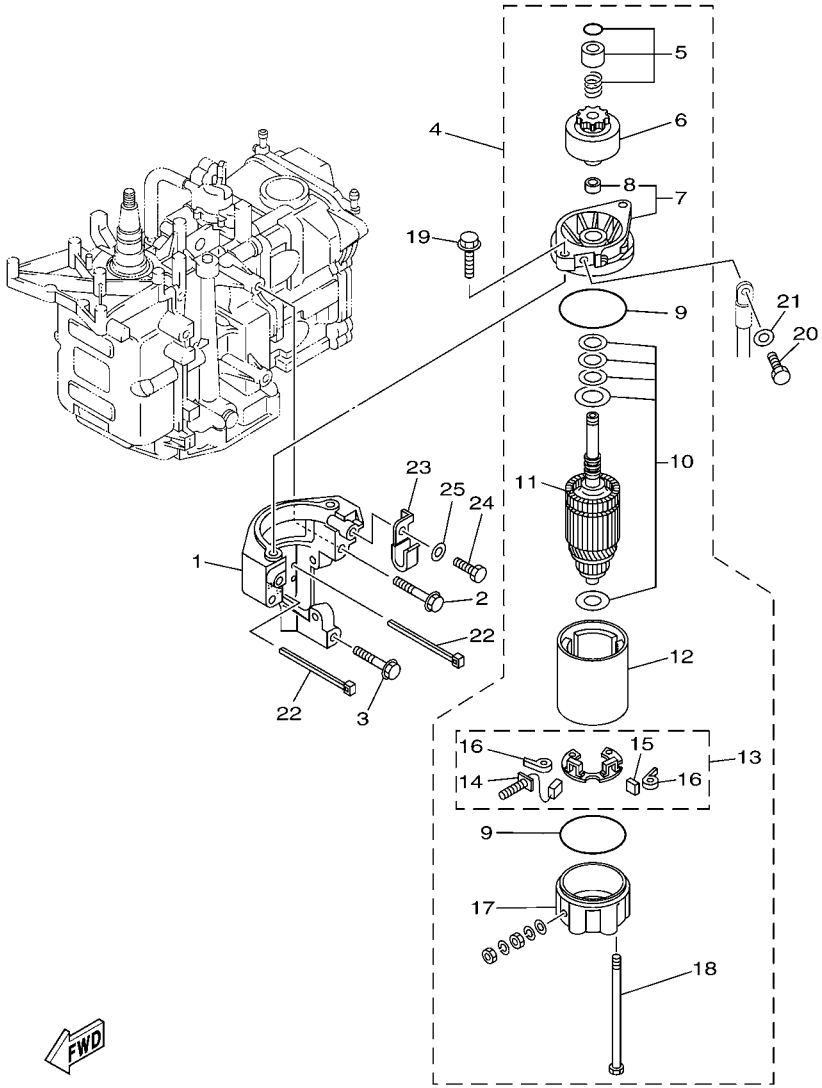

6AU1100-G160

REF. NO.	PART NO. N° PIECES	DESCRIPTION DESCRIPTION	M	E				REMARKS REMARQUES
1	68T–81822–01–94	BRACKET, STARTING MOTOR SUPPORT, DEMARREUR ELECTRIQUE	1	1				MH-FOR RUS MH-FOR RUS
2	90119–08046	BOLT, WITH WASHER BOULON, AVEC RONDELLE	2	2				MH-FOR RUS MH-FOR RUS
3	90119–08020	BOLT, WITH WASHER BOULON, AVEC RONDELLE	1	1				MH-FOR RUS MH-FOR RUS
4	68T–81800–00	STARTING MOTOR ASSY DEMARREUR ELECTRIQUE COMPLET		1				
5	68T–81857–00	.RETAINER .ARRETOIR		1				
6	689–81807–12	.GEAR ASSY, STARTING MOTOR .PIGNON, DEMARREUR ELECTRIQUE		1				
7	6F5–81830–10	.FRONT BRACKET ASSY .SUPPORT AVANT		1				
8	689–81831–00	..METAL, FRONT ..METAL, AVANT		1				
9	689–81847–11	.O-RING .JOINT TORIQUE		2				
10	689–81809–11	.WASHER KIT .JEU DE RONDELLES		1				
11	689–81850–11	.ARMATURE ASSY .INDUIT		1				
12	689–81810–11	.STATOR ASSY .STATOR COMPLET		1				
13	689–81840–11	.BRUSH HOLDER ASSY .SUPPORT DE CHARBON		1				
14	689–81811–11	..BRUSH 1 ..CHARBON 1		1				
15	689–81812–11	..BRUSH 2 ..CHARBON 2		1				
16	689–81813–10	..SPRING, BRUSH ..RESSORT, DE CHARBON		2				
17	689–81820–11	.REAR BRACKET ASSY .SUPPORT ARRIERE COMPLET		1				
18	689–81826–10	.BOLT .BOULON		2				
19	90119–08M76	BOLT, WITH WASHER BOULON, AVEC RONDELLE		2				
20	97095–08016	BOLT BOULON		1				
21	92995–08600	WASHER RONDELLE		1				
22	90465–11M10	CLAMP BRIDE	2	2				MH-FOR RUS MH-FOR RUS
23	90465–08M99	CLAMP BRIDE	1	1				MH-FOR RUS MH-FOR RUS
24	97095–06012	BOLT BOULON	1	1				MH-FOR RUS MH-FOR RUS
25	92995–06600	WASHER RONDELLE	1	1				MH-FOR RUS MH-FOR RUS

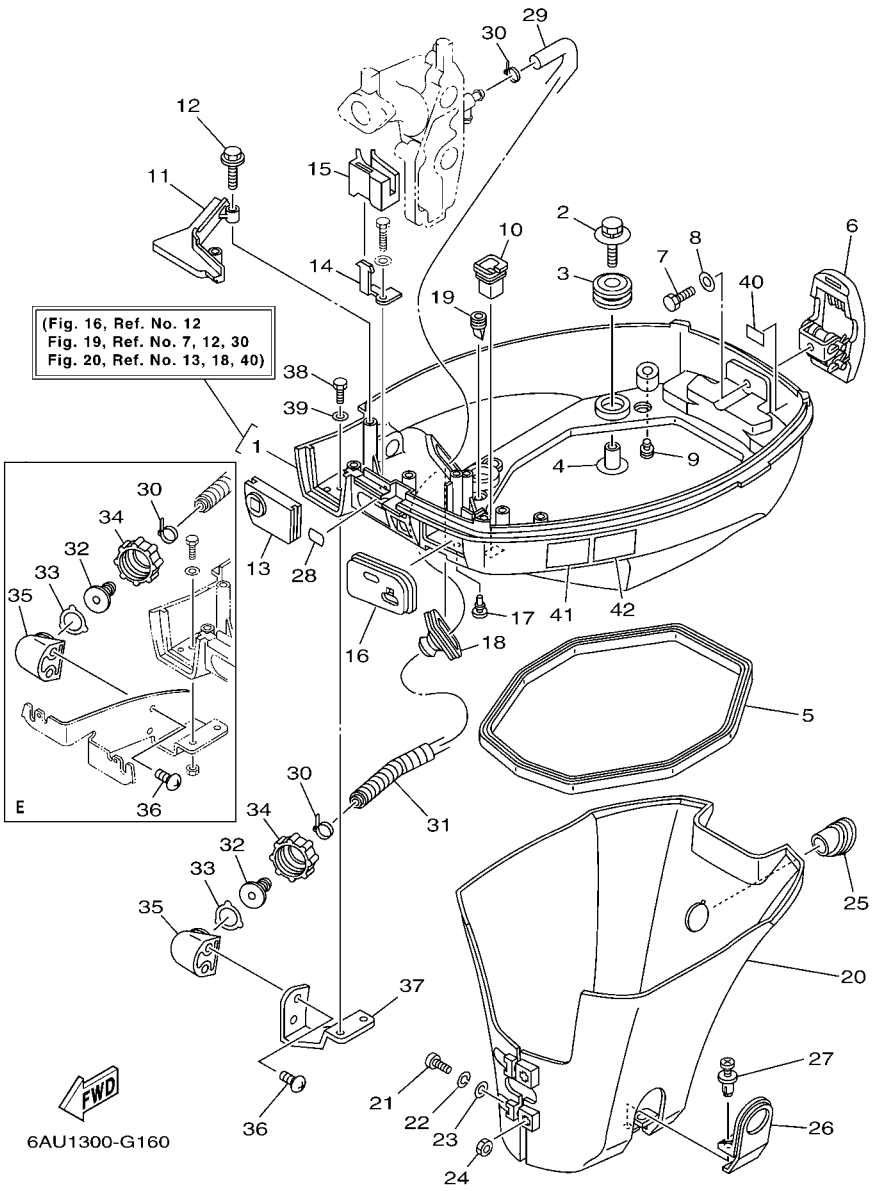

FIG. 16 BOTTOM COWLING CAPOT INFERIEUR

REF. NO.	PART NO. N° PIECES	DESCRIPTION DESCRIPTION	M	E				REMARKS REMARQUES
1	68T–42710–01–4D	BOTTOM COWLING ASSY ENS. EMBASE	1	1				WITH TAPPING BOLT WITH TAPPING BOLT
2	68F–85119–00	BOLT BOULON	4	4				
3	90480–21M82	GROMMET PASSE-FIL	4	4				
4	90387–06176	COLLAR COLLERETTE	4	4				
5	68T–42716–10	RUBBER, SEAL 1 JOINT EN CAOUTCHOUC 1	1	1				
6	6AU–42801–00	COWLING CLAMP COMP. BRIDE DE CAPOT COMP.	1	1				
7	97095–06012	BOLT BOULON	1	1				
8	92995–06600	WASHER RONDELLE	1	1				
9	6BL–44391–00	NIPPLE, HOSE RACCORD D'ESSENCE	1	1				
10	682–42727–00	GROMMET PASSE-FIL	1	1				
11	68T–42738–00–4D	PLATE, FITTING ETRIER	1	1				
12	90109–06M81	BOLT BOULON	2	2				
13	68T–42725–00	GROMMET PASSE-FIL	1					
	68T–42725–10	GROMMET PASSE-FIL		1				
14	68T–26393–00	HOLDER SUPPORT	1					
15	68T–26367–00	PROTECTOR PROTECTEUR	1					
16	68T–42724–00	GROMMET PASSE-FIL	1					
17	90480–06M19	GROMMET PASSE-FIL	1	1				
18	688–42726–10	GROMMET PASSE-FIL	1	1				FLUSHING KIT FLUSHING KIT
19	65W–42717–00	RUBBER, SEAL 2 JOINT EN CAOUTCHOUC 2	2	2				
20	68T–42741–00	APRON CAPOT LATERAL	1	1				
21	97885–06030	SCREW, PAN HEAD VIS, A ENCOCHE	2	2				
22	92995–06100	WASHER, SPRING RONDELLE, GROWER	2	2				
23	92995–06600	WASHER RONDELLE	2	2				
24	95380–06600	NUT, HEXAGON ECROU	2	2				
25	68T–42717–00	RUBBER, SEAL 2 JOINT EN CAOUTCHOUC 2	1	1				
26	68T–42771–00	APRON CAPOT LATERAL	1	1				

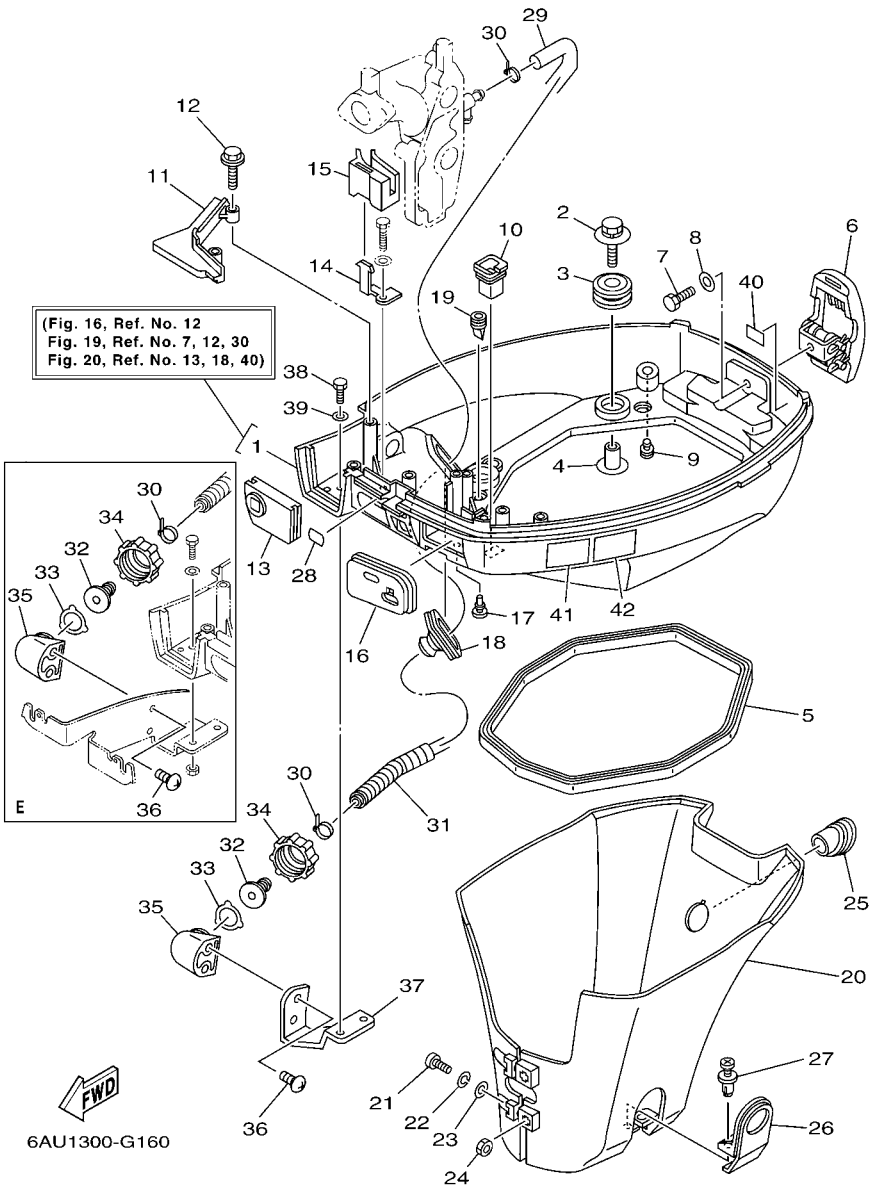

FIG. 16 BOTTOM COWLING CAPOT INFERIEUR

REF. NO.	PART NO. N° PIECES	DESCRIPTION DESCRIPTION	M	E				REMARKS REMARQUES
27	90338–06M20	PLUG PLOT	2	2				
28	65W–84342–00	SEAT, EMBLEM SIEGE, EMBLEME	1	1				
29	6E5–12481–00	PIPE 1 DURITE 1	1	1				FLUSHING KIT FLUSHING KIT
30	90465–11M10	CLAMP BRIDE	2	2				FLUSHING KIT FLUSHING KIT
31	90447–13M00	TUBE DURITE	1	1				FLUSHING KIT FLUSHING KIT
32	6R3–12582–00	JOINT, HOSE 2 RACCORD DE TUYAU 1	1	1				FLUSHING KIT FLUSHING KIT
33	6R3–12583–00	GASKET, HOSE JOINT JOINT	1	1				FLUSHING KIT FLUSHING KIT
34	6R3–12581–00	JOINT, HOSE 1 JOINT DE TUYAU	1	1				FLUSHING KIT FLUSHING KIT
35	68T–12572–00	ADAPTER ADAPTATEUR	1	1				FLUSHING KIT FLUSHING KIT
36	90167–06002	SCREW, TAPPING VIS, TETE FRAISEE	2	2				FLUSHING KIT FLUSHING KIT
37	68T–12535–00	PLATE PLAQUE	1					FLUSHING KIT FLUSHING KIT
38	97095–06012	BOLT BOULON	2					FLUSHING KIT FLUSHING KIT
39	92995–06600	WASHER RONDELLE	2					FLUSHING KIT FLUSHING KIT
40	6H8–42791–10	MARK 1 ETIQUETTE 1	1	1				
41	6AH–42794–40	LABEL, WARNING (GENERAL) ETIQUETTE, AVERTISSEMENT	1	1				
42	6AH–42794–50	LABEL, WARNING (GENERAL) ETIQUETTE, AVERTISSEMENT	1	1				

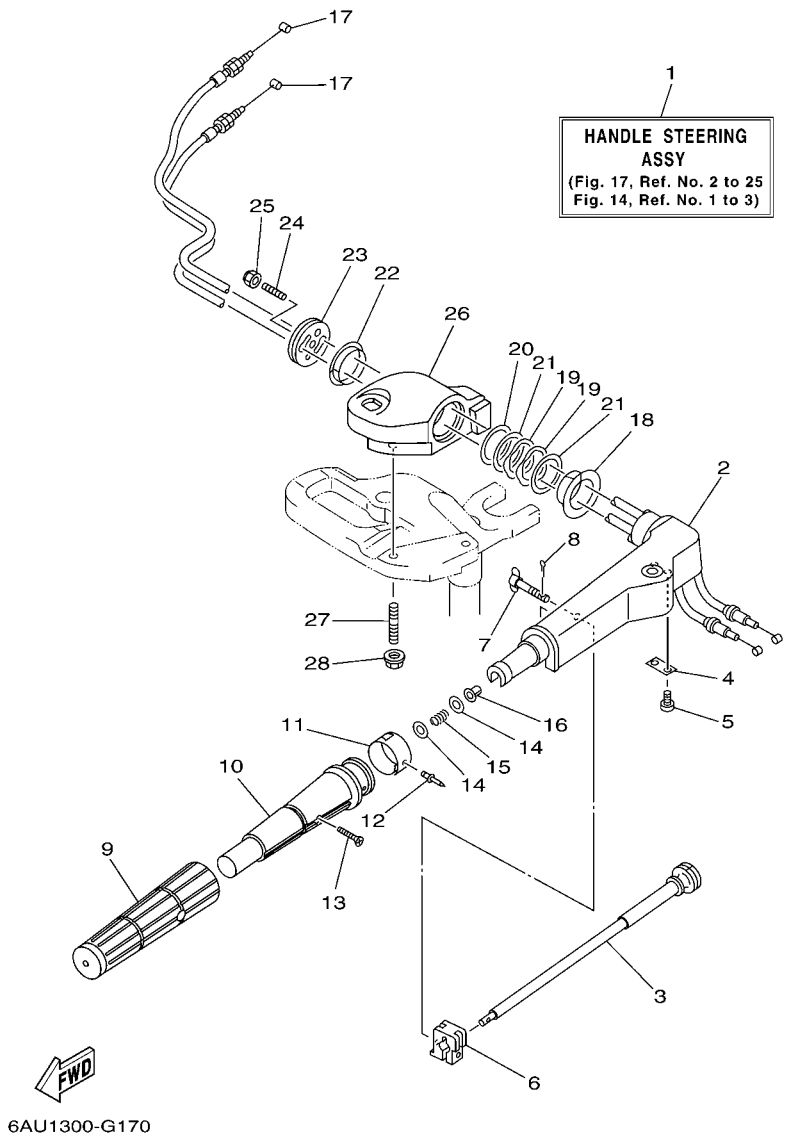

FIG. 17 STEERING DIRECTION

REF. NO.	PART NO. N° PIECES	DESCRIPTION DESCRIPTION	M	E				REMARKS REMARQUES
1	6AU–W0084–00–4D	HANDLE STEERING ASSY BARRE FRANCHE (ENS.)	1					
2	63V–42111–01–4D	HANDLE, STEERING POIGNEE	1					
3	6G1–42138–01	LEVER, THROTTLE LEVIER, ACCELERATEUR	1					
4	6E0–42159–02	STAY SUPPORT	1					
5	97885–05012	SCREW, PAN HEAD VIS, A ENCOCHE	2					
6	6G1–42126–00	FRICTION, STEERING HANDLE GRIP CUVETTE, POIGNEE DE DIRECTION	1					
7	6G1–42125–01	BOLT, FRICTION ADJUSTING BOULON	1					
8	91490–16010	PIN. COTTER GOUPILLE	1					
9	67D–42177–00	RUBBER, HANDLE CAOUTCHOUC, POIGNEE	1					
10	67D–42119–00	GRIP, STEERING HANDLE POIGNEE, BARRE FRANCHE	1					
11	6AU–42137–00	INDICATOR, THROTTLE INDICATEUR, ACCELERATION	1					
12	90269–02M09	RIVET RIVET	1					
13	90149–05M13	SCREW VIS	1					
14	90201–10M02	WASHER, PLATE RONDELLE, PLATE	2					
15	90501–23215	SPRING, COMPRESSION RESSORT, COMPRESSION	1					
16	90386–08032	BUSH DOUILLE	1					
17	68T–26301–01	THROTTLE CABLE ASSY CABLE D'ACCELERATEUR	2					
18	90386–34M97	BUSH DOUILLE	1					
19	90206–36M21	WASHER, WAVE RONDELLE, ONDULEE	2					
20	90202–36M55	WASHER, PLATE RONDELLE, PLATE	1					
21	90201–37008	WASHER, PLATE RONDELLE, PLATE	2					
22	90386–33M96	BUSH DOUILLE	1					
23	68T–42131–01	COVER, HANDLE STEERING COUVERCLE	1					
24	90116–08015	BOLT, STUD GOUJON	1					
25	90185–08057	NUT, SELF-LOCKING ECROU,AUTO-BLOQUANT	1					
26	6AU–42121–01–4D	BRACKET SUPPORT	1					
27	90116–10040	BOLT, STUD GOUJON	2					

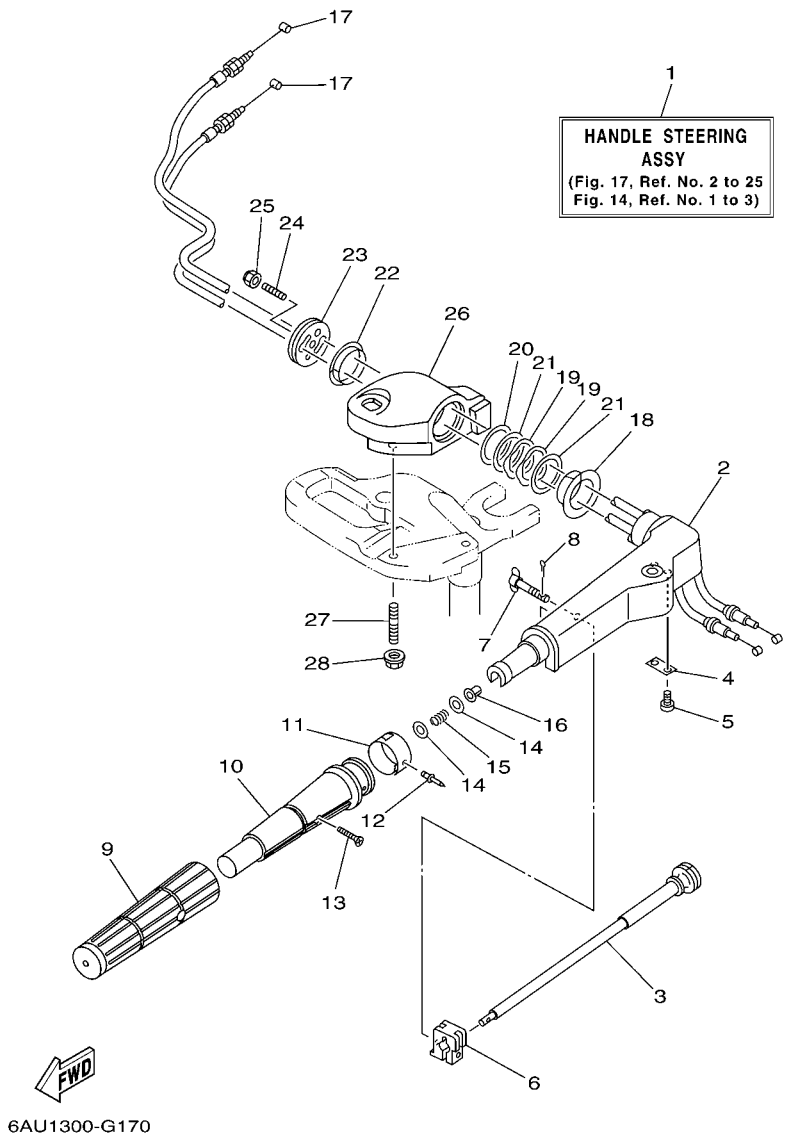

FIG. 17 STEERING DIRECTION

REF. NO.	PART NO. N° PIECES	DESCRIPTION DESCRIPTION	M	E				REMARKS REMARQUES
28	90179–10M33	NUT ECROU	2					

FIG. 18 STEERING FRICTION CUVETTE POIGNEE DE DIRECTION

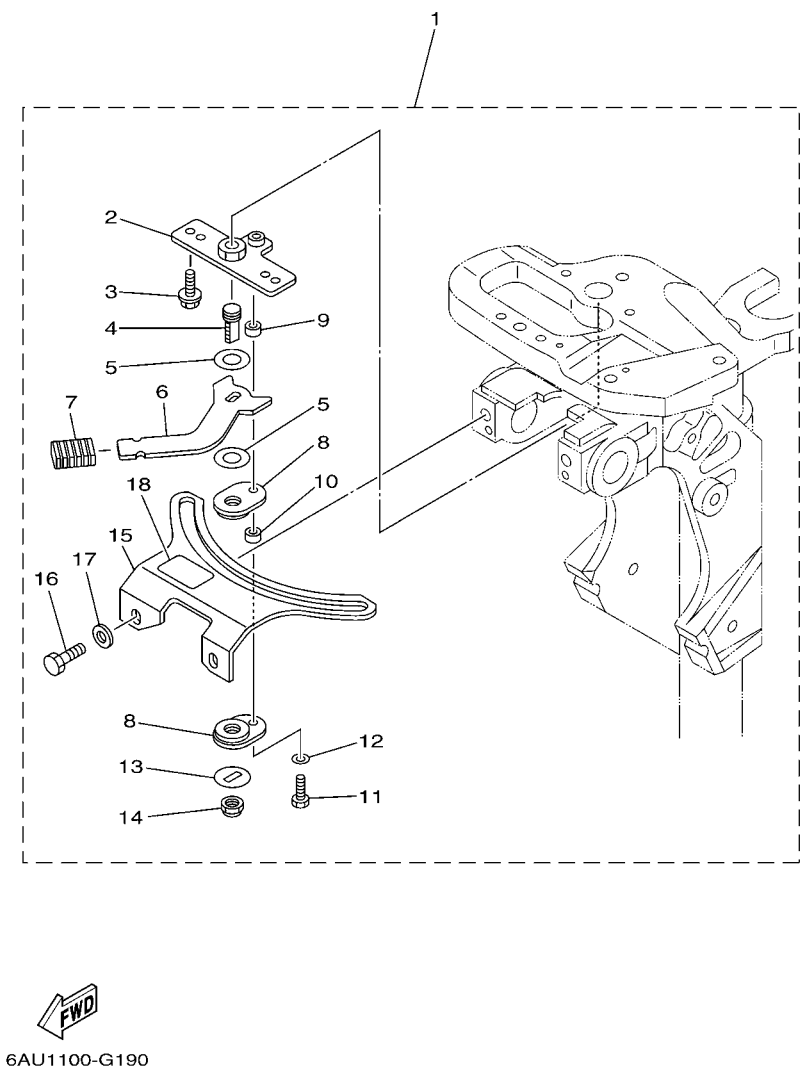

REF. NO.	PART NO. N° PIECES	DESCRIPTION DESCRIPTION	M	E				REMARKS REMARQUES
1	6AH–42508–00	STEERING FRICTION ASSY DIRECTION FRICTION (ENS.)	1					
2	68T–42525–01	.PLATE, FRICTION .PLAQUE, FRICTION	1					
3	90119–05018	.BOLT, WITH WASHER .BOULON, AVEC RONDELLE	2					
4	67C–42562–00	.SHAFT, STEERING LOCK .ARBRE,ANTIVOL DE DIRECTION	1					
5	90202–10M56	.WASHER, PLATE .RONDELLE, PLATE	2					
6	68T–42561–00	.KNOB, STEERING LOCK .BOUTON	1					
7	689–43633–00	.COVER, TILT LEVER .COUVERCLE	1					
8	65W–42528–00	.PLATE, FRICTION .PLAQUE, FRICTION	2					
9	90387–05M05	.COLLAR .COLLERETTE	1					
10	90387–05M11	.COLLAR .COLLERETTE	1					
11	97095–05020	.BOLT .BOULON	1					
12	92995–05600	.WASHER .RONDELLE	1					
13	90209–10M26	.WASHER .RONDELLE	1					
14	90185–10M14	.NUT, SELF-LOCKING .ECROU,AUTO-BLOQUANT	1					
15	6AH–42527–00	.PLATE, FRICTION .PLAQUE, FRICTION	1					
16	90101–08022	.BOLT .BOULON	2					
17	90201–08065	.WASHER, PLATE .RONDELLE, PLATE	2					
18	68T–43155–00	.MARK 1 .ETIQUETTE 1	1					

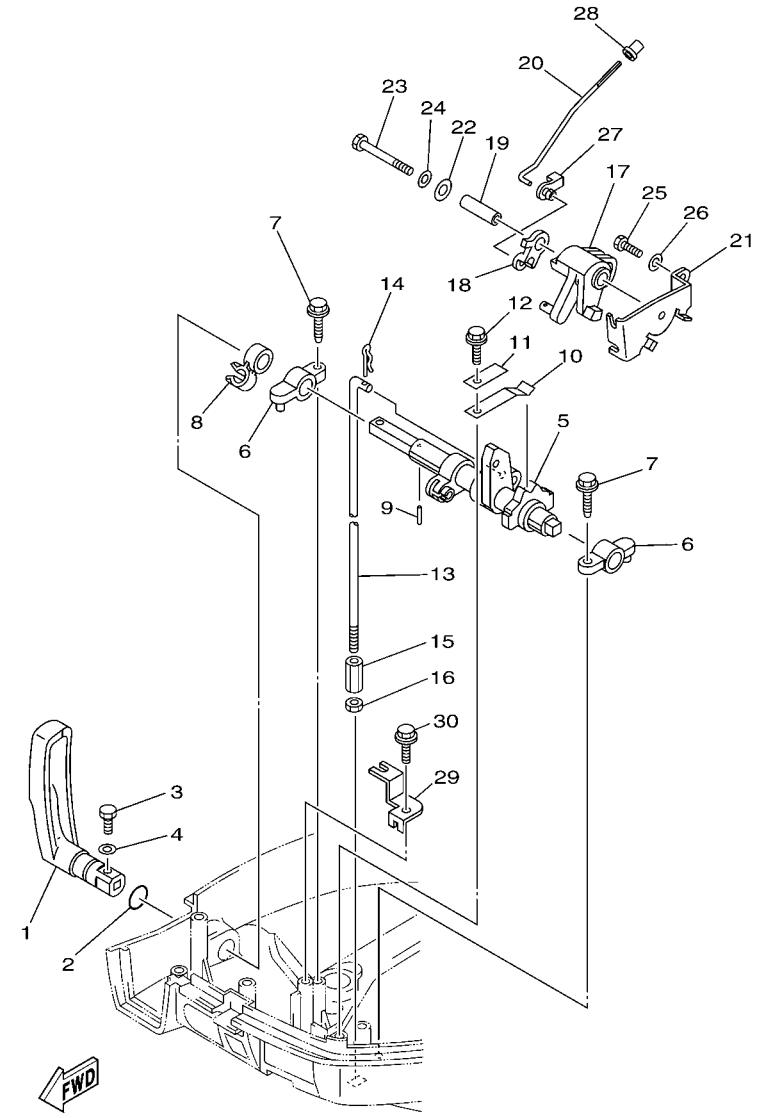

6AU1300-G190

FIG. 19 CONTROL 1 COMMANDE 1

REF. NO.	PART NO. N° PIECES	DESCRIPTION DESCRIPTION	M	E				REMARKS REMARQUES
1	6AU–44111–00	HANDLE, GEAR SHIFT POIGNEE, LEVIER D'EMBRAYAGE	1					
2	93210–12327	O-RING JOINT TORIQUE	1					
3	97095–05016	BOLT BOULON	1					
4	92995–05600	WASHER RONDELLE	1					
5	68T–44121–02	LEVER, SHIFT ROD LEVIER, TIGE D'INVERSION	1					
6	6G1–41662–01–94	BRACKET 2 SUPPORT 2	2					
7	90109–06M81	BOLT BOULON	2					
8	90464–10M60	CLAMP BRIDE	1					
9	91690–30014	PIN, SPRING AGRAFFE	1					
10	65W–44116–00	SPRING RESSORT	1					
11	66R–44114–00	STOPPER PLAQUETTE	1					
12	90109–06M86	BOLT BOULON	1					
13	68T–44143–00	ROD, SHIFT TIGE D'EMBRAYAGE	1					S(16.9") S(16.9")
	68T–44143–10	ROD, SHIFT TIGE D'EMBRAYAGE	1					L(21.9") L(21.9")
14	90468–18001	CLIP JONC	1					
15	90170–06015	NUT ECROU	1					
16	95380–06700	NUT ECROU	1					
17	68T–41638–00	PULLEY POULIE	1					
18	68T–41283–00	LEVER, FREE ACCEL. LEVIER	1					
19	90387–06M59	COLLAR COLLERETTE	1					
20	6AU–41211–00	LINK, ACCEL. BIELLETTE, ACCELERATION	1					
21	68T–14497–00	STAY, THROTTLE WIRE SUPPORT DE BOISSEAU	1					
22	90201–06M62	WASHER, PLATE RONDELLE, PLATE	1					
23	97095–06045	BOLT BOULON	1					
24	92995–06600	WASHER RONDELLE	1					
25	97095–06012	BOLT BOULON	1					
26	92995–06600	WASHER RONDELLE	1					

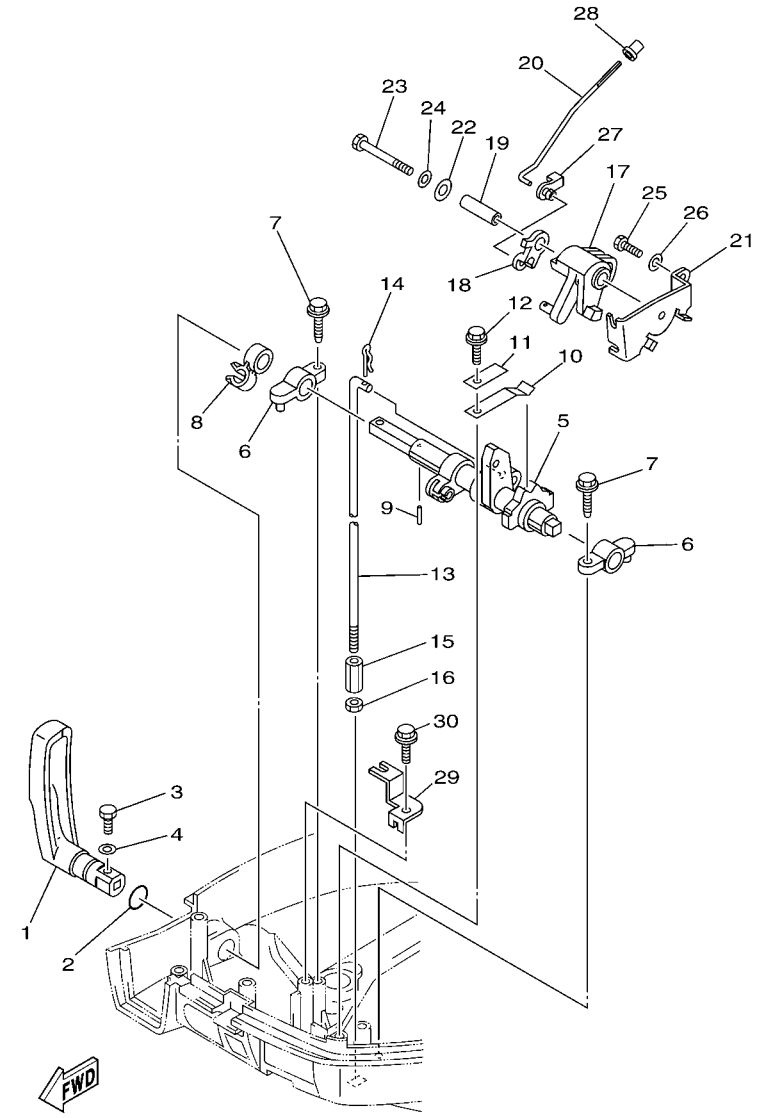

6AU1300-G190

FIG. 19 CONTROL 1 COMMANDE 1

REF. NO.	PART NO. N° PIECES	DESCRIPTION DESCRIPTION	M	E				REMARKS REMARQUES
27	661–41262–02	JOINT, CHOKE LEVER RACCORD, LEVIER DE STARTER	1					
28	647–14395–60	CAP, OVERFLOW PIPE COUVRE DE DURITE REFOULEMENT	1					
29	68T–15774–00	STAY 4 SUPPORT 4	1					EXCEPT FOR RUS EXCEPT FOR RUS
	68T–15774–10	STAY 4 SUPPORT 4	1					FOR RUS FOR RUS
30	90109–06M86	BOLT BOULON	1					EXCEPT FOR RUS EXCEPT FOR RUS
	90109–06M86	BOLT BOULON	2					FOR RUS FOR RUS

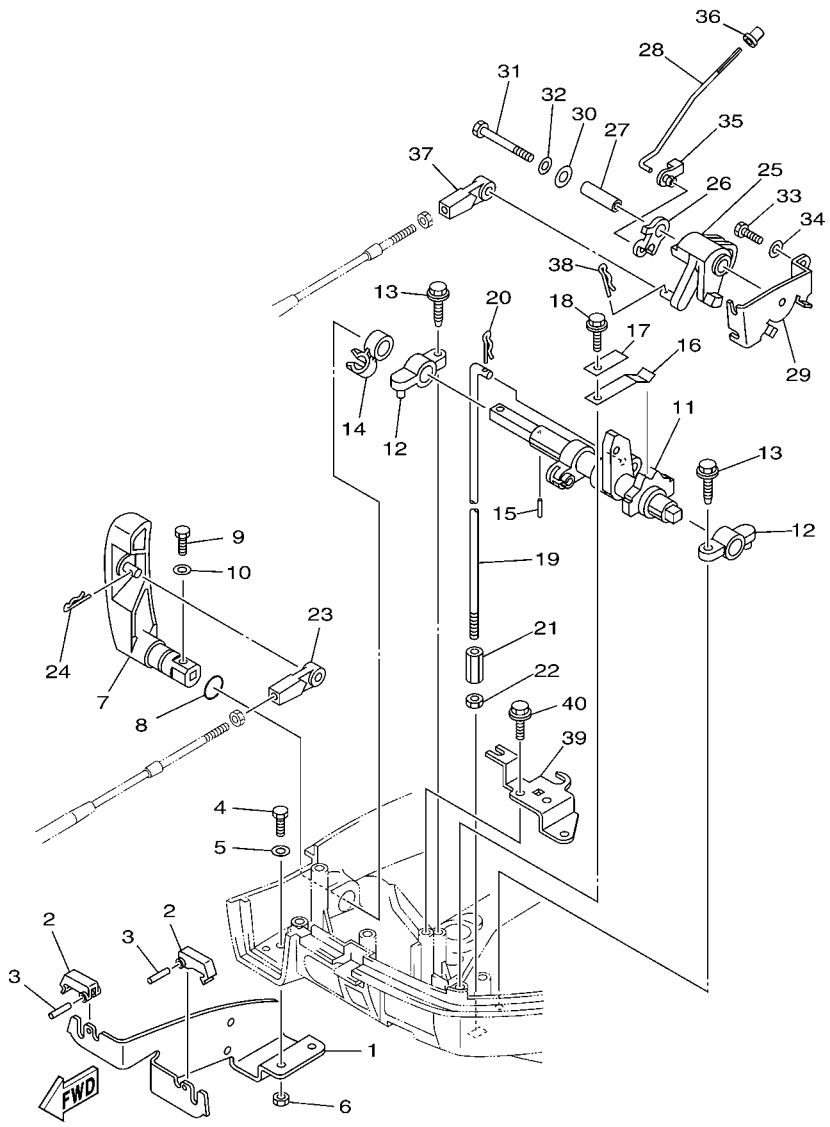

FIG. 20 CONTROL 2 COMMANDE 2

REF. NO.	PART NO. N° PIECES	DESCRIPTION DESCRIPTION	M	E				REMARKS REMARQUES
1	68T–48531–00	BRACKET, REMOTE CONTROL 1 ETRIER 1, COMMANDE A DISTANCE		1				
2	682–48538–50	CLAMP, CABLE 1 COLLIER		2				
3	91690–30012	PIN, SPRING AGRAFFE		2				
4	97095–06012	BOLT BOULON		2				
5	92995–06600	WASHER RONDELLE		2				
6	95380–06600	NUT, HEXAGON ECROU		2				
7	6AU–44111–10	HANDLE, GEAR SHIFT POIGNEE, LEVIER D'EMBRAYAGE		1				
8	93210–12327	O-RING JOINT TORIQUE		1				
9	97095–05016	BOLT BOULON		1				
10	92995–05600	WASHER RONDELLE		1				
11	68T–44121–02	LEVER, SHIFT ROD LEVIER, TIGE D'INVERSION		1				
12	6G1–41662–01–94	BRACKET 2 SUPPORT 2		2				
13	90109–06M81	BOLT BOULON		2				
14	90464–10M60	CLAMP BRIDE		1				
15	91690–30014	PIN, SPRING AGRAFFE		1				
16	65W–44116–00	SPRING RESSORT		1				
17	66R–44114–00	STOPPER PLAQUETTE		1				
18	90109–06M86	BOLT BOULON		1				
19	68T–44143–00	ROD, SHIFT TIGE D'EMBRAYAGE		1				S(16.9") S(16.9")
	68T–44143–10	ROD, SHIFT TIGE D'EMBRAYAGE		1				L(21.9") L(21.9")
20	90468–18001	CLIP JONC		1				
21	90170–06015	NUT ECROU		1				
22	95380–06700	NUT ECROU		1				
23	663–48344–00	CABLE END, REMOTE CONTROL CHAPE CABLE		1				
24	90468–18008	CLIP JONC		1				
25	68T–41638–00	PULLEY POULIE		1				
26	68T–41283–00	LEVER, FREE ACCEL. LEVIER		1				

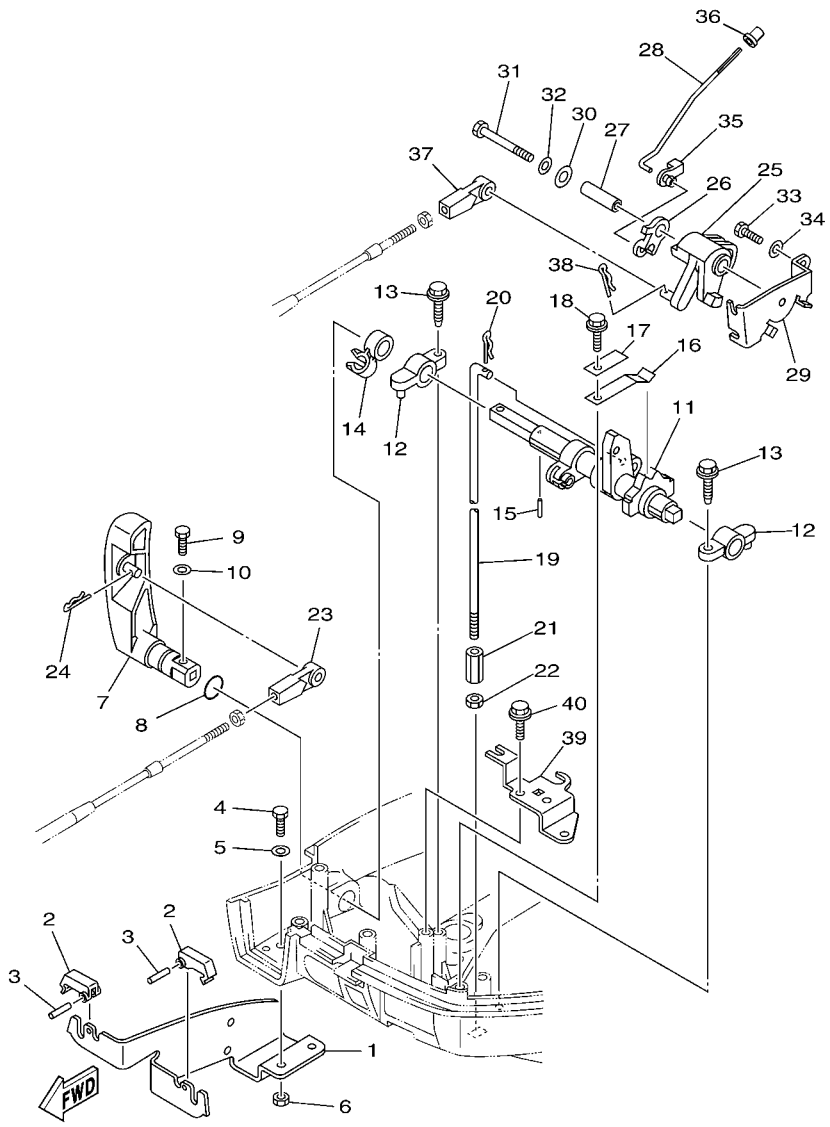

FIG. 20 CONTROL 2 COMMANDE 2

REF. NO.	PART NO. N° PIECES	DESCRIPTION DESCRIPTION	M	E				REMARKS REMARQUES
27	90387–06M59	COLLAR COLLERETTE		1				
28	6AU–41211–00	LINK, ACCEL. BIELLETTE, ACCELERATION		1				
29	68T–14497–00	STAY, THROTTLE WIRE SUPPORT DE BOISSEAU		1				
30	90201–06M62	WASHER, PLATE RONDELLE, PLATE		1				
31	97095–06045	BOLT BOULON		1				
32	92995–06600	WASHER RONDELLE		1				
33	97095–06012	BOLT BOULON		1				
34	92995–06600	WASHER RONDELLE		1				
35	661–41262–02	JOINT, CHOKE LEVER RACCORD, LEVIER DE STARTER		1				
36	647–14395–60	CAP, OVERFLOW PIPE COUVRE DE DURITE REFOULEMENT		1				
37	663–48344–00	CABLE END, REMOTE CONTROL CHAPE CABLE		1				
38	90468–18008	CLIP JONC		1				
39	68T–15774–10	STAY 4 SUPPORT 4		1				
40	90109–06M86	BOLT BOULON		2				

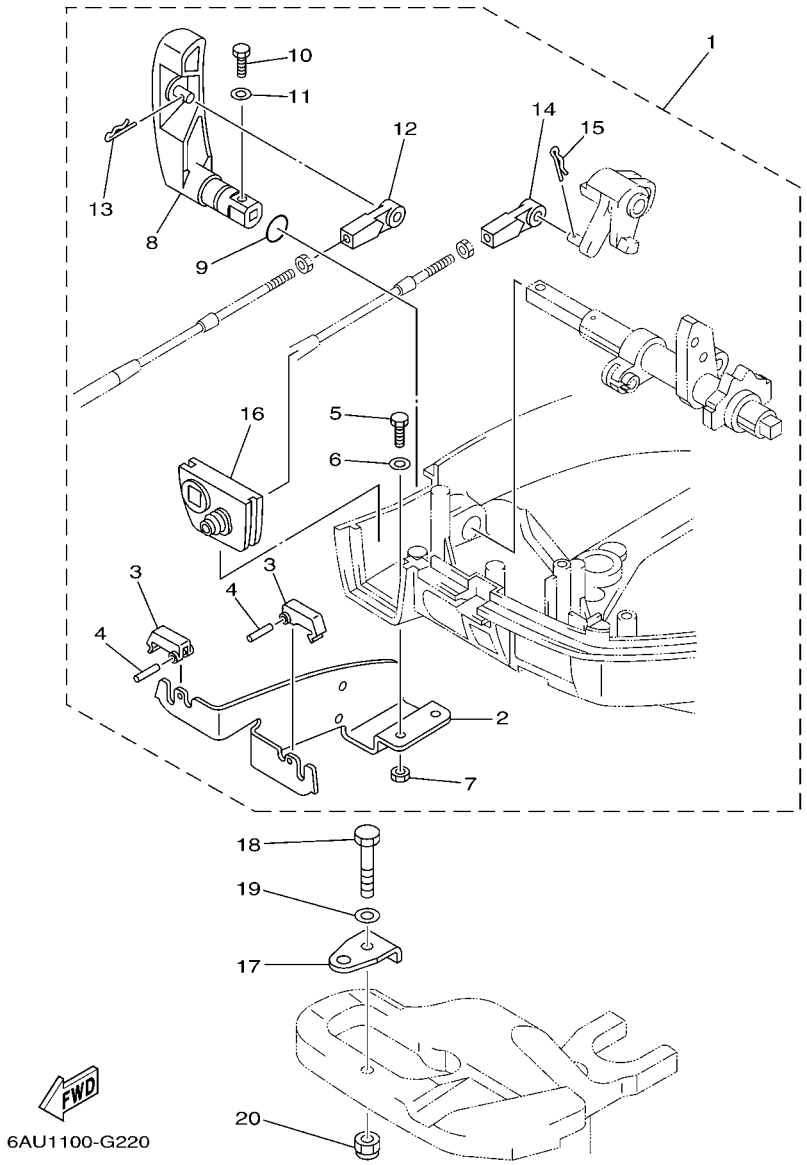

FIG. 21 REMO CON ATTACHMENT COMMANDE A DISTANCE

REF. NO.	PART NO. N° PIECES	DESCRIPTION DESCRIPTION	M	E				REMARKS REMARQUES
1	6AU–48501–00	REMOTE CONT. ATTACHMENT ASSY. COMMANDE A DISTANCE (KIT)	1					AP AP
2	68T–48531–00	.BRACKET, REMOTE CONTROL 1 .ETRIER 1, COMMANDE A DISTANCE	1					
3	682–48538–50	.CLAMP, CABLE 1 .COLLIER	2					
4	91690–30012	.PIN, SPRING .AGRAFFE	2					
5	97095–06012	.BOLT .BOULON	2					
6	92995–06600	.WASHER .RONDELLE	2					
7	95380–06600	.NUT, HEXAGON .ECROU	2					
8	6AU–44111–10	.HANDLE, GEAR SHIFT .POIGNEE, LEVIER D'EMBRAYAGE	1					
9	93210–12327	.O-RING .JOINT TORIQUE	1					
10	97095–05016	.BOLT .BOULON	1					
11	92995–05600	.WASHER .RONDELLE	1					
12	663–48344–00	.CABLE END, REMOTE CONTROL .CHAPE CABLE	1					
13	90468–18008	.CLIP .JONC	1					
14	663–48344–00	.CABLE END, REMOTE CONTROL .CHAPE CABLE	1					
15	90468–18008	.CLIP .JONC	1					
16	68T–42725–10	.GROMMET .PASSE-FIL	1					
17	63V–48511–01	HOOK, STEERING ATTACHE, DIRECTION	1					AP AP
18	97075–08035	BOLT BOULON	1					AP AP
19	92995–08600	WASHER RONDELLE	1					AP AP
20	90185–08057	NUT, SELF-LOCKING ECROU,AUTO-BLOQUANT	1					AP AP

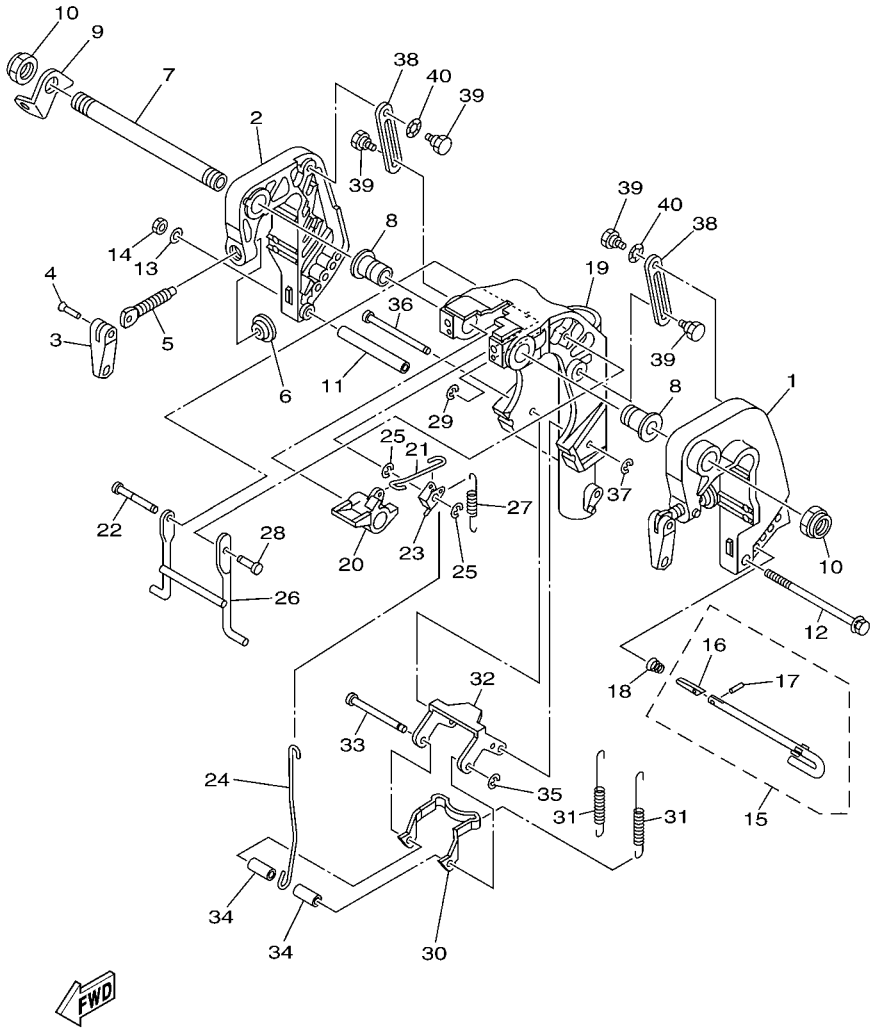

FIG. 22 BRACKET 1 SUPPORT 1

REF. NO.	PART NO. N° PIECES	DESCRIPTION DESCRIPTION	M	E				REMARKS REMARQUES
1	6AH–43111–00–4D	BRACKET, CLAMP 1 PRESSE 1	1	1				
2	6AH–43112–00–4D	BRACKET, CLAMP 2 PRESSE 2	1	1				
3	6E0–43118–01	HANDLE, TRANSOM CLAMP POIGNEE DE VIS DE PRESSE	2	2				
4	90243–04M01	PIN GOUPILLE	2	2				
5	6E7–43116–00	SCREW, TRANSOM CLAMP VIS DE PRESSE	2	2				
6	648–43114–01	PAD, TRANSOM CLAMP RONDELLE D'APPUI	2	2				
7	69A–43131–00	BOLT, CLAMP BRACKET BOULON, PRESSE	1	1				FOR REMOTE CONTROL FOR REMOTE CONTROL
8	90386–22MA4	BUSH DOUILLE	2	2				
9	66R–43113–00	PLATE, CLAMP BRACKET PLAQUETTE, PRESSE	1	1				
10	90185–22043	NUT, SELF-LOCKING ECROU,AUTO-BLOQUANT	2	2				
11	90387–06M13	COLLAR COLLERETTE	1	1				
12	90101–06M18	BOLT BOULON	1	1				
13	92990–06600	WASHER, PLATE RONDELLE, PLATE	1	1				
14	95380–06700	NUT ECROU	1	1				
15	6L2–43160–01	TILT ROD ASSY BROCHE D'INCLINAISON (ENS.)	1	1				
16	689–43165–00	.PLATE, TILT LOCK .TAQUET, BROCHE INCLINAISON	1	1				
17	91690–30008	.PIN, SPRING .AGRAFFE	1	1				
18	90502–10M07	SPRING, CONICAL RESSORT, CONIQUE	1	1				
19	6AH–43311–00–4D	BRACKET, SWIVEL 1 SUPPORT, PIVOT 1	1	1				S(16.9") S(16.9")
	6AU–43311–10–4D	BRACKET, SWIVEL 1 SUPPORT, PIVOT 1	1	1				L(21.9") L(21.9")
20	6AH–43631–00	LEVER, TILT LEVIER, INCLINAISON	1	1				
21	6AH–43616–00	ROD, TILT LOCK TIGE	1	1				
22	68T–43646–00	SHAFT, LEVER AXE, LEIVER	1	1				
23	6AH–43641–00	LEVER, TILT LEVIER, INCLINAISON	1	1				
24	6AH–43617–00	ROD, TILT LOCK TIGE	1	1				
25	99080–05600	CIRCLIP CIRCLIP	2	2				
26	6AH–43350–00	RECEIVER ASSY RECEIVER ASSY	1	1				

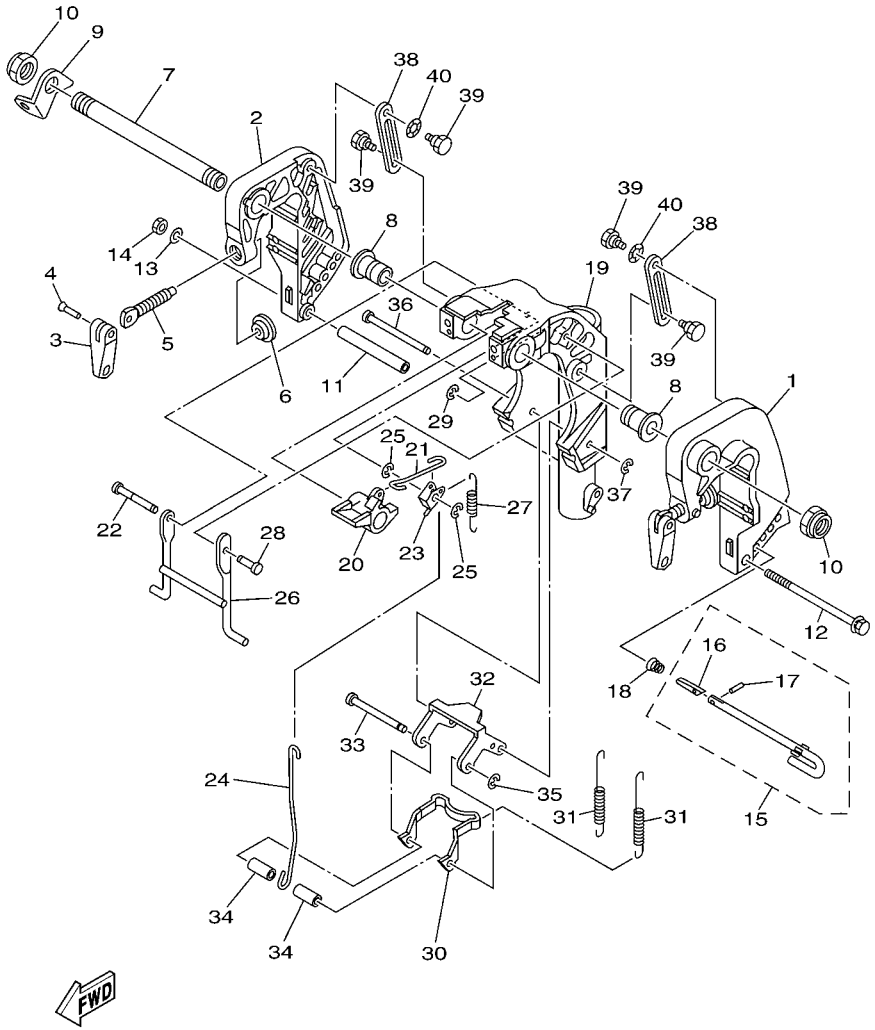

FIG. 22 BRACKET 1 SUPPORT 1

REF. NO.	PART NO. N° PIECES	DESCRIPTION DESCRIPTION	M	E				REMARKS REMARQUES
27	90506–18014	SPRING, TENSION RESSORT, TENSION	1	1				S(16.9") S(16.9")
	90506–20025	SPRING, TENSION RESSORT, TENSION	1	1				L(21.9") L(21.9")
28	63V–43191–00	SHAFT, STOPPER AXE, BUTEE	1	1				
29	99080–05600	CIRCLIP CIRCLIP	1	1				
30	6AH–43614–00	PLATE, TILT LOCK ETRIER, VERROUILLAGE MARCHE AR	1	1				
31	90506–20020	SPRING, TENSION RESSORT, TENSION	2	2				S(16.9") S(16.9")
	90506–23016	SPRING, TENSION RESSORT, TENSION	2	2				L(21.9") L(21.9")
32	6AH–43615–00	PLATE, TILT LOCK ETRIER, VERROUILLAGE MARCHE AR	1	1				
33	68T–43611–00	SHAFT, TILT LOCK AXE, VERROUILLAGE MARCHE AR	1	1				
34	90387–06138	COLLAR COLLERETTE	2	2				
35	93430–04M03	CIRCLIP CLIPS	1	1				
36	68T–43659–00	SHAFT, REVERSE LOCK AXE, VERROUILLAGE MARCHE AR	1	1				
37	99080–05600	CIRCLIP CIRCLIP	1	1				
38	6AH–43627–00	STOPPER PLAQUETTE	2	2				
39	90109–06M84	BOLT BOULON	4	4				
40	90206–10M24	WASHER, WAVE RONDELLE, ONDULEE	2	2				

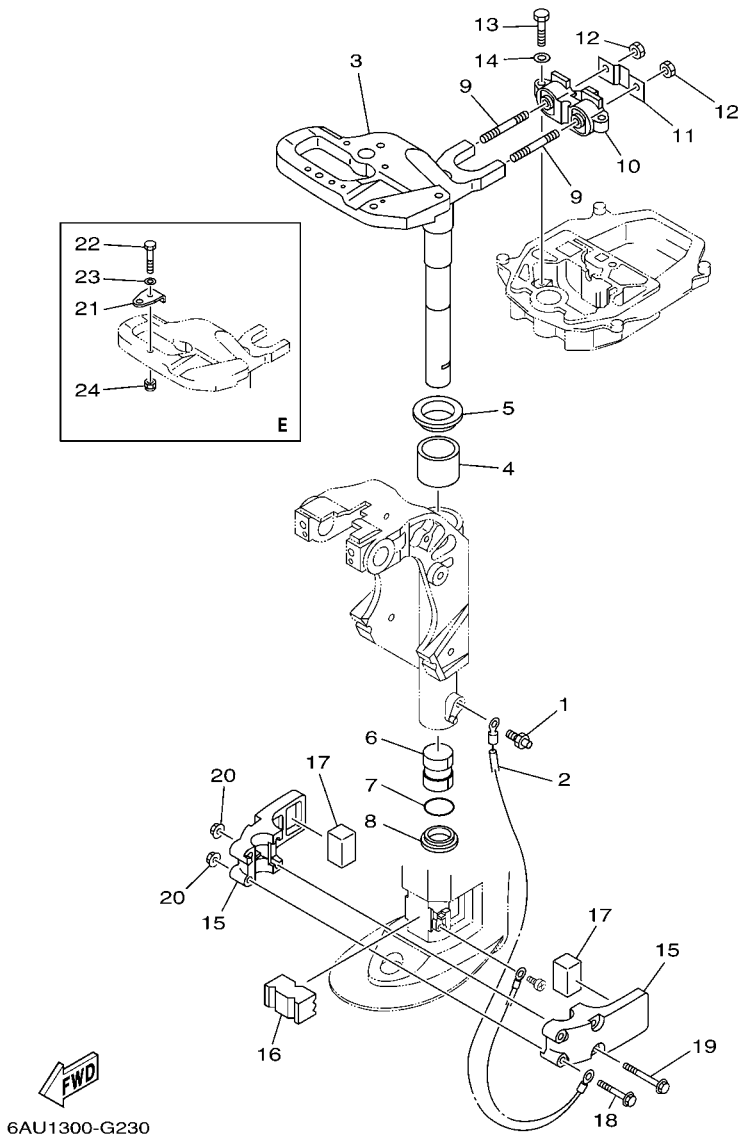

FIG. 23 BRACKET 2 SUPPORT 2

REF. NO.	PART NO. N° PIECES	DESCRIPTION DESCRIPTION	M	E				REMARKS REMARQUES
1	93700–06M03	NIPPLE, GREASE PION	1	1				
2	68T–82127–00	WIRE, LEAD 2 FIL 2	1	1				
3	6AU–42511–00–4D	BRACKET, STEERING CADRE, DIRECTION	1	1				S(16.9") S(16.9")
	6AU–42511–10–4D	BRACKET, STEERING CADRE, DIRECTION	1	1				L(21.9") L(21.9")
4	90386–40001	BUSH DOUILLE	1	1				
5	90209–40008	WASHER RONDELLE	1	1				
6	90386–30048	BUSH DOUILLE	1	1				
7	93210–29M94	O-RING JOINT TORIQUE	1	1				
8	90386–30M60	BUSH DOUILLE	1	1				
9	90116–08M54	BOLT, STUD GOUJON	2	2				
10	68T–44517–00–94	MOUNT RUBBER SILENT-BLOC	1	1				
11	68T–44526–00	PLATE PLAQUE	1	1				
12	95380–08600	NUT ECROU	2	2				
13	97075–06025	BOLT BOULON	2	2				
14	92995–06600	WASHER RONDELLE	2	2				
15	6AU–44551–00–4D	HOUSING, LOWER MOUNT RUBBER BOITIER, SILENT-BLOC INFERIEUR	2	2				
16	6AU–44557–00	MOUNT DAMPER, LOWER FRONT SILENT-BLOC, INFERIEUR AVANT	1	1				
17	682–44555–30	MOUNT DAMPER, LOWER SIDE SILENT-BLOC, INFERIEUR LATERAL	2	2				
18	90119–06012	BOLT, WITH WASHER BOULON, AVEC RONDELLE	2	2				
19	90119–06198	BOLT, WITH WASHER BOULON, AVEC RONDELLE	2	2				
20	90179–06M28	NUT ECROU	4	4				
21	63V–48511–01	HOOK, STEERING ATTACHE, DIRECTION		1				
22	97075–08035	BOLT BOULON		1				
23	92995–08600	WASHER RONDELLE		1				
24	90185–08057	NUT, SELF-LOCKING ECROU,AUTO-BLOQUANT		1				

FIG. 24 UPPER CASING FOURREAU

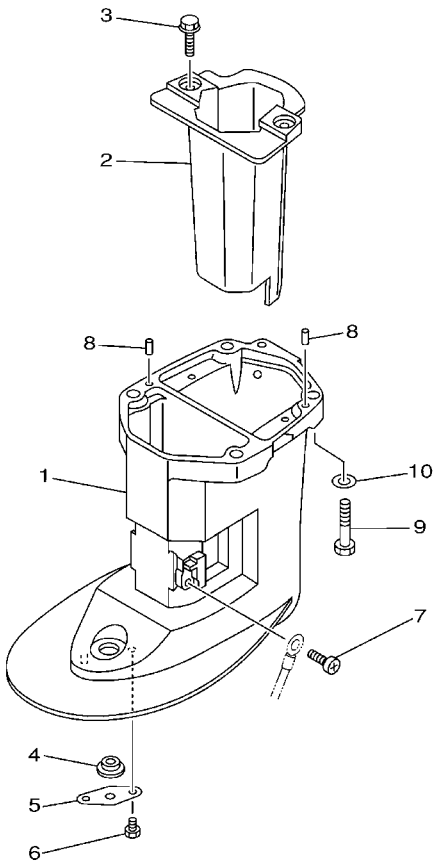

68R0010-0220

REF. NO.	PART NO. N° PIECES	DESCRIPTION DESCRIPTION	M	E				REMARKS REMARQUES
1	6AU–45111–00–4D	CASING, UPPER FOURREAU	1	1				S(16.9") S(16.9")
	6AU–45111–10–4D	CASING, UPPER FOURREAU	1	1				L(21.9") L(21.9")
2	6AU–14711–00–5B	MUFFLER 1 POT D'ECHAPPEMENT 1	1	1				
3	97575–06514	BOLT, WITH WASHER VIS HEXAGONAL AVC RONDELLE	2	2				
4	90480–14M54	GROMMET PASSE-FIL	1	1				
5	68T–45321–00	PLATE PLAQUETTE	1	1				
6	97095–06008	BOLT BOULON	1	1				
7	97885–05008	SCREW, PAN HEAD VIS, A ENCOCHE	1	1				
8	93604–12M07	PIN, DOWEL CLAVETTE	2	2				
9	97075–08035	BOLT BOULON	4	4				
10	92995–08600	WASHER RONDELLE	4	4				

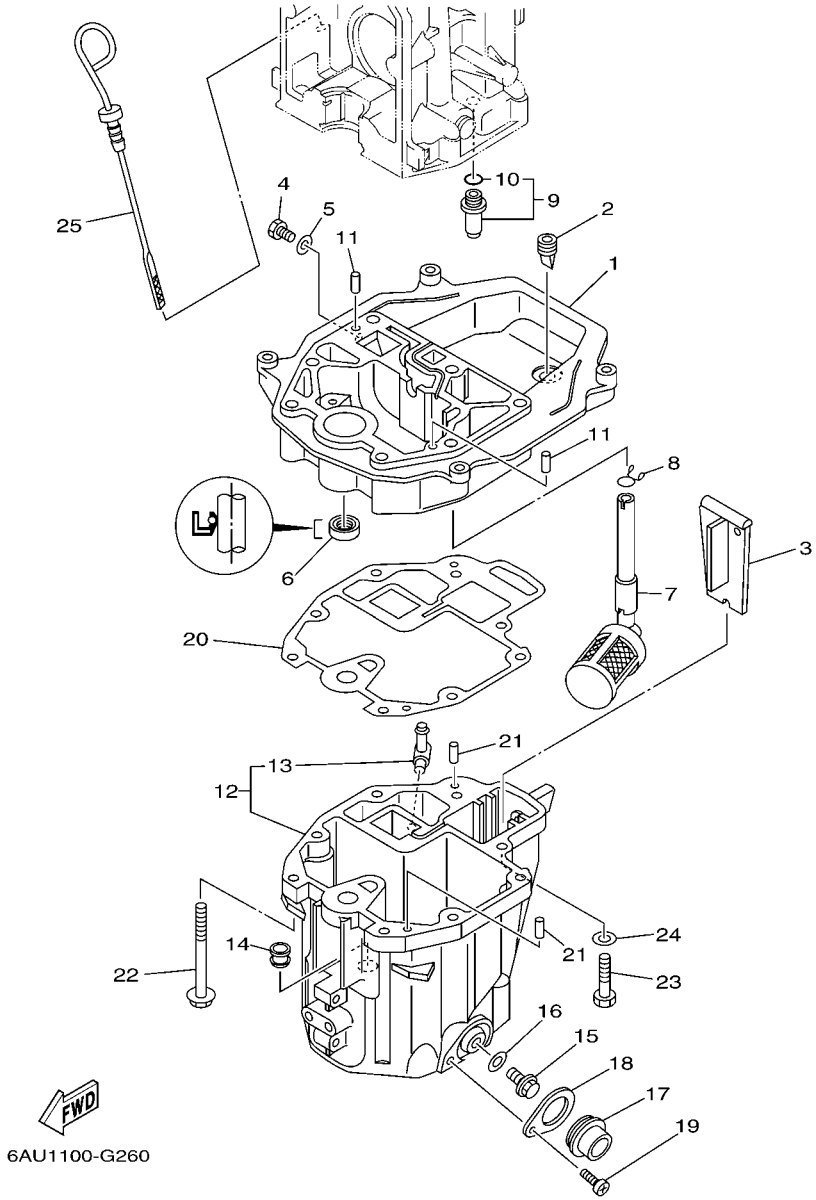

FIG. 25 OIL PAN — VENTILATEUR D'HUILE

REF. NO.	PART NO. N° PIECES	DESCRIPTION DESCRIPTION	M	E				REMARKS REMARQUES
1	68T–41137–00–94	GUIDE, EXHAUST COLLECTEUR D'ECHAPPEMENT	1	1				
2	65W–42717–00	RUBBER, SEAL 2 JOINT EN CAOUTCHOUC 2	1	1				
3	68T–45181–00	PLATE PLAQUETTE	1	1				
4	97095–08014	BOLT BOULON	1	1				
5	90430–08143	GASKET JOINT	1	1				
6	93101–12M70	OIL SEAL JOINT SPY	1	1				
7	68T–13421–01	STRAINER 2 FILTRE 2	1	1				
8	90467–11M08	CLIP JONC	1	1				
9	6G8–11575–00	RELIEF VALVE ASSY SOUPAPE DE RENTREE D'AIR	1	1				
10	93210–12M62	.O-RING .JOINT TORIQUE	1	1				
11	93606–19M23	PIN, DOWEL GOUPILLE	2	2				
12	68T–15311–01–5B	OIL PAN VENTILATEUR D'HUILE	1	1				
13	6H1–11372–00	.NIPPLE, HOSE .RACCORD, TUYAU	1	1				
14	90480–10M28	GROMMET PASSE-FIL	1	1				
15	90340–10M10	PLUG, STRAIGHT SCREW PLOT, FILETE DROIT	1	1				
16	90430–10M11	GASKET JOINT	1	1				
17	68T–15316–00	DAMPER 1 AMORTISSEUR 1	1	1				
18	68T–15317–00	SPACER, ENGINE MOUNT ENTRETOISE DE SUPPORT	1	1				
19	97885–05008	SCREW, PAN HEAD VIS, A ENCOCHE	1	1				
20	68T–13475–00	GASKET JOINT	1	1				
21	93604–12M07	PIN, DOWEL CLAVETTE	2	2				
22	90119–08005	BOLT, WITH WASHER BOULON, AVEC RONDELLE	6	6				
23	97075–08030	BOLT BOULON	2	2				
24	92995–08600	WASHER RONDELLE	2	2				
25	68T–15362–00	PLUG, OIL LEVEL PLOT, NIVEAU D'HUILE	1	1				

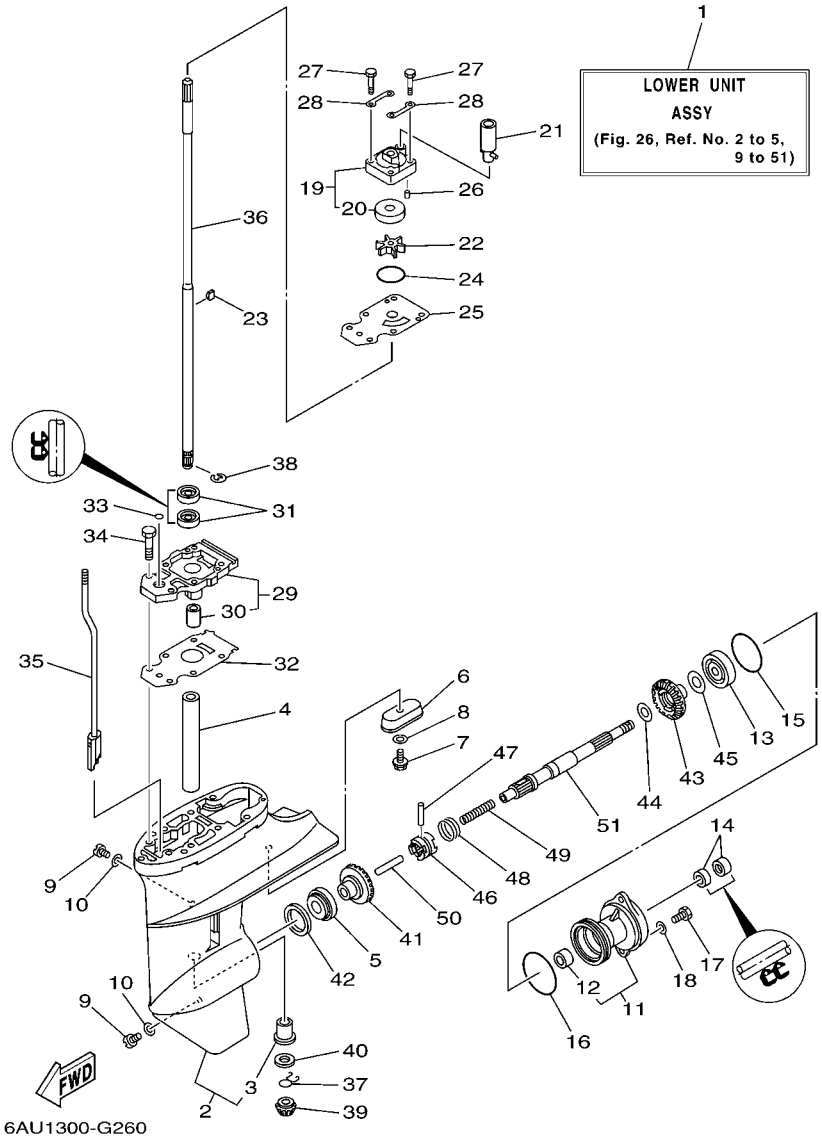

FIG. 26 LOWER CASING & DRIVE 1 BOITIER D'HELICE TRANSMISSION1

REF. NO.	PART NO. N° PIECES	DESCRIPTION DESCRIPTION	M	E				REMARKS REMARQUES
1	6AU–45300–00–4D	LOWER UNIT ASSY UNITE INFERIEURE (ENS.)	1	1				S(16.9") S(16.9")
	6AU–45300–10–4D	LOWER UNIT ASSY UNITE INFERIEURE (ENS.)	1	1				L(21.9") L(21.9")
2	6AU–45311–00–4D	CASING, LOWER BOITIER D'HELICE	1	1				
3	6G1–45317–09	.BUSHING, DRIVE SHAFT .DOUILLE, ARBRE MOTEUR	1	1				
4	90387–14M49	COLLAR COLLERETTE	1	1				
5	93306–004U0	BEARING ROULEMENT	1	1				
6	68T–45251–00	ANODE ANODE	1	1				
7	95895–06016	BOLT, FLANGE BOULON	1	1				
8	92990–06300	WASHER, INTERNAL TOOTH RONDELLE, DENTURE INTERNE	1	1				
9	90340–08002	PLUG, STRAIGHT SCREW PLOT, FILETE DROIT	2	2				
10	90430–08020	GASKET JOINT	2	2				
11	6G1–45361–01–4D	CAP, LOWER CASING COUVERCLE, BOITIER D'HELICE	1	1				
12	6G1–45362–09	.BUSHING .COUSSINET	1	1				
13	93306–004U0	BEARING ROULEMENT	1	1				
14	93101–15074	OIL SEAL JOINT SPY	2	2				
15	93210–49046	O-RING JOINT TORIQUE	1	1				
16	93210–53M08	O-RING JOINT TORIQUE	1	1				
17	97095–06016	BOLT BOULON	2	2				
18	92995–06600	WASHER RONDELLE	2	2				
19	63V–44301–00	WATER PUMP HOUSING COMP. CARTER, POMPE A EAU (ENS)	1	1				
20	63V–44322–00	.INSERT, CARTRIDGE .CUVETTE	1	1				
21	68T–44366–00	DAMPER, WATER SEAL JOINT, TUBE D'EAU	1	1				
22	68T–44352–00	IMPELLER TURBINE	1	1				
23	664–44338–00	KEY, WOODRUFF CLAVETTE, VOLANT	1	1				
24	93210–44398	O-RING JOINT TORIQUE	1	1				
25	68T–44323–00	OUTER PLATE, CARTRIDGE PLAQUE EXTERIEURE	1	1				
26	93604–12M07	PIN, DOWEL CLAVETTE	2	2				

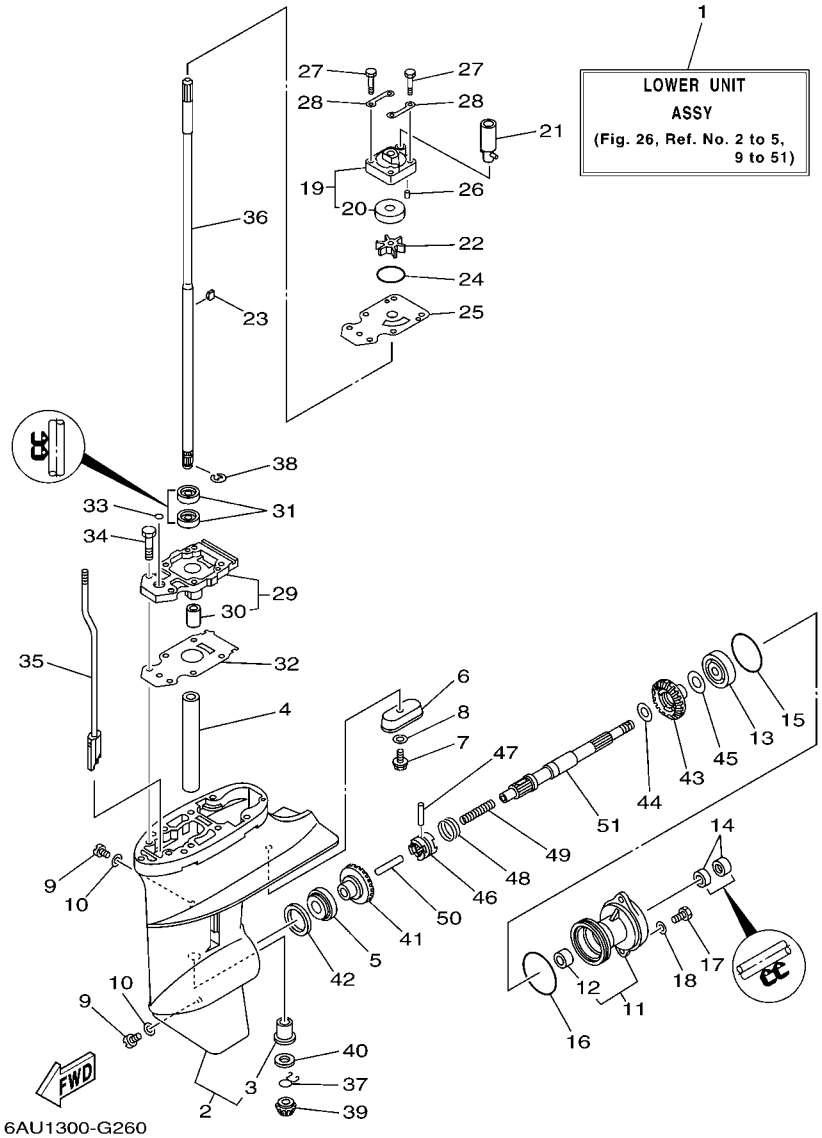

FIG. 26 LOWER CASING & DRIVE 1 BOITIER D'HELICE TRANSMISSION1

REF. NO.	PART NO. N° PIECES	DESCRIPTION DESCRIPTION	M	E				REMARKS REMARQUES
27	97080–08045	BOLT BOULON	4	4				
28	63V–44328–00	PLATE PLAQUETTE	2	2				
29	68T–45331–00–5B	HOUSING, BEARING FLASQUE, ROULEMENT	1	1				
30	6G1–45316–09	.BUSHING, DRIVE SHAFT .DOUILLE, ARBRE MOTEUR	1	1				
31	93101–11M23	OIL SEAL JOINT SPY	2	2				
32	68T–45315–A0	PACKING, LOWER CASING JOINT, BOITIER D'HELICE	1	1				
33	93210–06ME6	O-RING JOINT TORIQUE	1	1				
34	97080–08025	BOLT BOULON	2	2				
35	68T–44150–00	SHIFT CAM ASSY CAME D'INVERSION	1	1				
36	6AU–45511–00	SHAFT, DRIVE ARBRE, MOTEUR	1	1				S(16.9") S(16.9")
	6AU–45511–10	SHAFT, DRIVE ARBRE, MOTEUR	1	1				L(21.9") L(21.9")
37	90467–09M05	CLIP JONC	1	1				
38	99001–07600	CIRCLIP CIRCLIP	1	1				
39	68T–45551–00	PINION (13T) PIGNON D'ATTAQUE (13D)	1	1				
40	6G1–45533–00	SHIM (T:1.90MM) CALE (T:1.90MM)	1	1				UR UR
	6G1–45533–10	SHIM (T:2.00MM) CALE (T:2.00MM)	1	1				UR UR
	6G1–45533–20	SHIM (T:2.10MM) CALE (T:2.10MM)	1	1				UR UR
	6G1–45533–30	SHIM (T:2.20MM) CALE (T:2.20MM)	1	1				UR UR
41	68T–45560–00	GEAR 1 (27T) PIGNON 1 (27T)	1	1				
42	664–45587–01	SHIM (T:0.10MM) CALE (T:0.10MM)	1	1				UR UR
	664–45587–10	SHIM (T:0.12MM) CALE (T:0.12MM)	1	1				UR UR
	664–45587–20	SHIM (T:0.15MM) CALE (T:0.15MM)	1	1				UR UR
	664–45587–30	SHIM (T:0.18MM) CALE (T:0.18MM)	1	1				UR UR
	664–45587–40	SHIM (T:0.30MM) CALE (T:0.30MM)	1	1				UR UR
	664–45587–50	SHIM (T:0.40MM) CALE (T:0.40MM)	1	1				UR UR
	664–45587–60	SHIM (T:0.50MM) CALE (T:0.50MM)	1	1				UR UR
43	68T–45571–00	GEAR 2 (27T) PIGNON 2 (27T)	1	1				

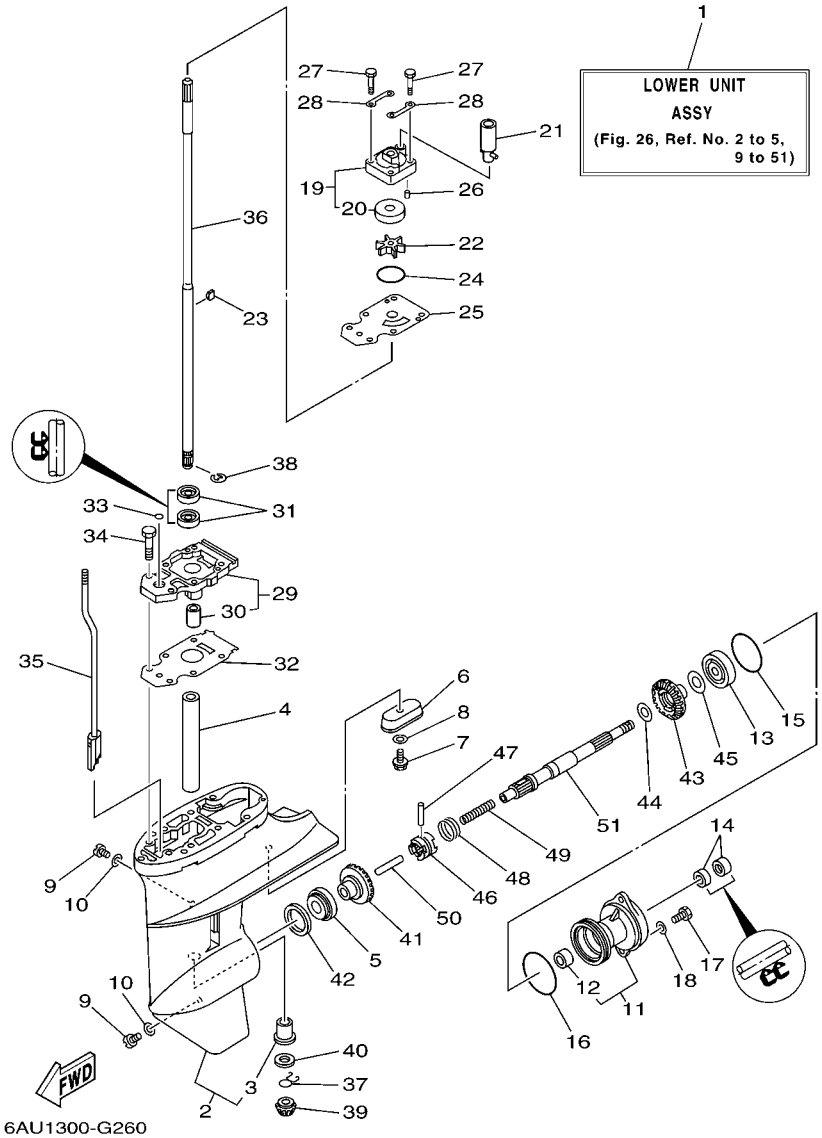

FIG. 26 LOWER CASING & DRIVE 1 BOITIER D'HELICE TRANSMISSION1

REF. NO.	PART NO. N° PIECES	DESCRIPTION DESCRIPTION	M	E				REMARKS REMARQUES
44	90201–15M89	WASHER, PLATE RONDELLE, PLATE	1	1				
45	647–45567–00	SHIM (T:0.10MM) CALE (T:0.10MM)	1	1				UN UN
46	68T–45631–00	CLUTCH, DOG CRABOT	1	1				
47	6G1–45632–00	PIN, CROSS GOUPILLE DE CRABOT	1	1				
48	654–45633–00	RING, CROSS PIN JONC, GOUPILLE CRABOT	1	1				
49	90501–140A1	SPRING, COMPRESSION RESSORT, COMPRESSION	1	1				
50	6G1–45635–00	PLUNGER, SHIFT POUSSOIR D'EMBRAYAGE	1	1				
51	68T–45611–00	SHAFT, PROPELLER ARBRE, HELICE	1	1				

FIG. 27 LOWER CASING & DRIVE 2 BOITIER D'HELICE TRANSMISSION2

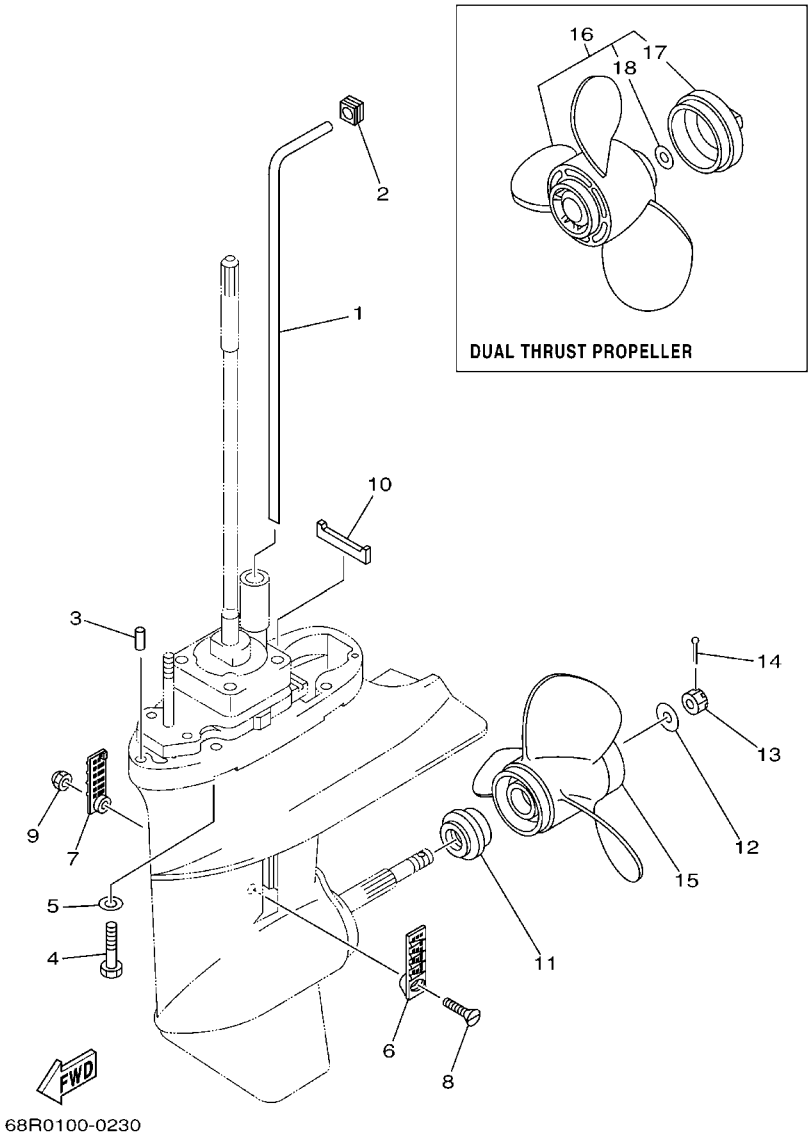

REF. NO.	PART NO. N° PIECES	DESCRIPTION DESCRIPTION	M	E				REMARKS REMARQUES
1	68T–44361–00	TUBE, WATER TUBE D'EAU	1	1				S(16.9") S(16.9")
	68T–44361–10	TUBE, WATER TUBE D'EAU	1	1				L(21.9") L(21.9")
2	63V–44365–10	DAMPER, WATER SEAL JOINT, TUBE D'EAU	1	1				
3	93604–12M07	PIN, DOWEL CLAVETTE	2	2				
4	97075–08035	BOLT BOULON	4	4				
5	92995–08600	WASHER RONDELLE	4	4				
6	6G1–45214–00	COVER, WATER INLET 1 GRILLE, ENTREE D'EAU 1	1	1				
7	6G1–45215–00	COVER, WATER INLET 2 GRILLE, ENTREE D'EAU 2	1	1				
8	90152–05M03	SCREW, COUNTERSUNK VIS, TETE NOYEE	1	1				
9	90185–05002	NUT, NYLON ECROU,AUTO-BLOQUANT	1	1				
10	63V–45375–00	DAMPER, SEAL BOURRELET, CAOUTCHOUC	1	1				
11	6G1–45987–02	SPACER ENTRETOISE	1	1				
12	90201–10M01	WASHER, PLATE RONDELLE, PLATE	1	1				
13	90171–10M01	NUT, CASTLE ECROU, CRENELE	1	1				
14	91490–30020	PIN. COTTER GOUPILLE	1	1				
15	6G1–45941–00–EL	PROPELLER (3X8-1/2"X8-1/2"-N) HELICE (3X8-1/2"X8-1/2"-N)	1	1				UR UR
	6G1–45943–00–EL	PROPELLER (3X8-1/2"X7-1/2"-N) HELICE (3X8-1/2"X7-1/2"-N)	1	1				UR UR
	6G1–45947–00–EL	PROPELLER (3X8-1/2"X6-1/2"-N) HELICE (3X8-1/2"X6-1/2"-N)	1	1				UR UR
	6G1–45952–00–EL	PROPELLER (3X8-1/2"X8"-N) HELICE (3X8-1/2"X8"-N)	1	1				UR UR
	6G1–45954–00–EL	PROPELLER (3X8-1/2"X9-1/4"-N) HELICE (3X8-1/2"X9-1/4"-N)	1	1				UR UR
16	6G1–W4591–01–EL	PROPELLER (3X9"X7"-N) HELICE (3X9"X7"-N)	1	1				UR UR
	6G1–W4592–00–EL	PROPELLER (3X9"X5"-N) HELICE (3X9"X5"-N)	1	1				UR UR
17	6G1–45616–01	.NUT, PROPELLER .CONE, HELICE	1	1				
18	90201–10M02	.WASHER, PLATE .RONDELLE, PLATE	1	1				

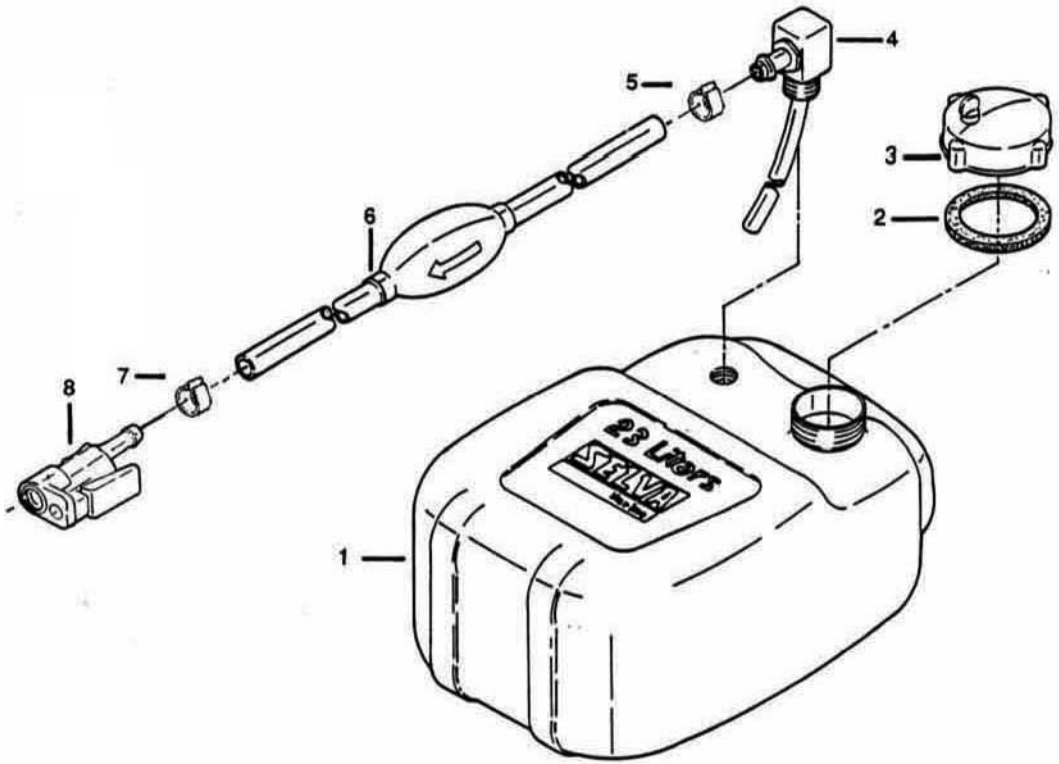

FIG. 26 FUEL TANK 12 L RESEVOIR A ESSENCE 12 L

REF. NO.	PART NO. NO. PIECES	DESCRIPTION DESCRIPTION						REMARKS REMARQUES
1	8085070	COMPLETE FUEL TANK 12 L RESEVOIR A ESSENCE (ENS.) 12 L			1			
2	3540275	GASKET JOINT			1			
3	1598845	FUEL TANK PLUG (POS. NO 2+3) BOUCHON (ENS.) (POS. 2+3)			1			
4	8055075	COMPLETE FUEL SUCTION DURITE DE SUCCION			1			
5	7080500	CLAMP COLLIER			1			
6	8050270	FUEL HOSE DURITE A ESSENCE			1			
7	7080490	CLAMP COLLIER			1			
8	6G1-24305-01	FUEL CONNECTOR - FEMALE DURITE RACCORDEMENT A ESSENCE			1			
	1575260	FUEL TANK WITH PIPE RESEVOIR A ESSENCE + DURITE			1			
	1581280	COMPLETE PIPE (POS.NO. 5+6+7) DURITE A ESSENCE (ENS) (POS. 5+6+7)			1			

FIG. 29 STEERING GUIDE FIXATION DE DIRECTION

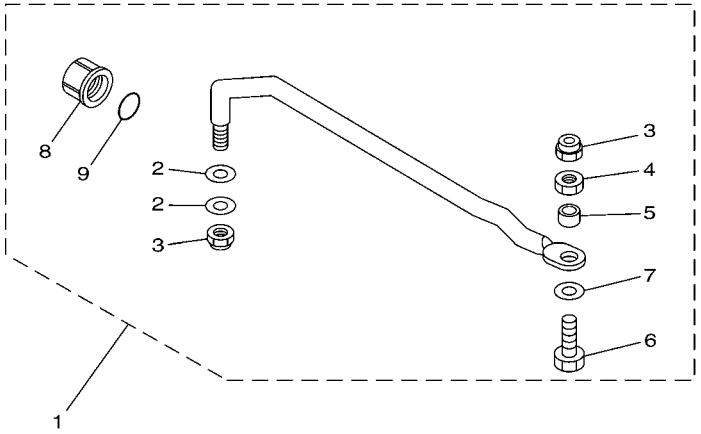

6AU1100-G300

REF. NO.	PART NO. N° PIECES	DESCRIPTION DESCRIPTION	M	E				REMARKS REMARQUES
1	68T–61350–10	STEERING GUIDE ATTACHMENT KIT FIXATIONS DE DIRECTION	1	1				AP AP
2	90201–10M20	.WASHER, PLATE .RONDELLE, PLATE	2	2				
3	90185–09M01	.NUT, SELF-LOCKING .ECROU,AUTO-BLOQUANT	2	2				
4	90170–09M03	.NUT .ECROU	1	1				
5	90387–10M42	.COLLAR .COLLERETTE	1	1				
6	6E5–61355–00	.BOLT .BOULON	1	1				
7	90201–10M63	.WASHER, PLATE .RONDELLE, PLATE	1	1				
8	6E5–43145–01	.CAP, CLAMP BRACKET .CAPUCHON, PRESSE	1	1				
9	93210–16275	.O-RING .JOINT TORIQUE	1	1				

FIG. 30 REMOTE CONTROL BOX BOITIER DE COMMANDE A DISTANCE

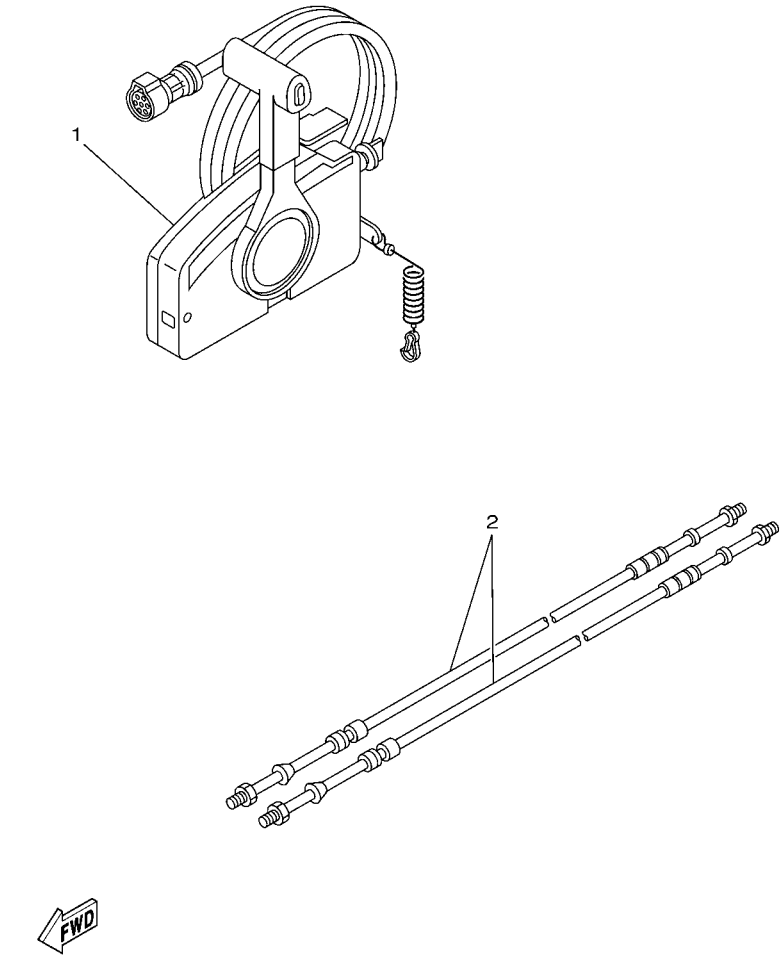

67M0100-8280

REF. NO.	PART NO. N° PIECES	DESCRIPTION DESCRIPTION	M	E				REMARKS REMARQUES
1	703–48201–16	REMOTE CONTROL ASSY (10P) BOITIER DE COMMANDE A DISTANCE		1				AP WITHOUT PT/T SW. AP WITHOUT PT/T SW.
2	701–48310–80	CABLE, REMOTE CONTROL L=10F CABLE, COMMANDE A DISTANCE:10F		2				UR UR
	701–48310–90	CABLE, REMOTE CONTROL L=11F CABLE, COMMANDE A DISTANCE:11F		2				UR UR
	701–48320–00	CABLE, REMOTE CONTROL L=12F CABLE, COMMANDE A DISTANCE:12F		2				UR UR

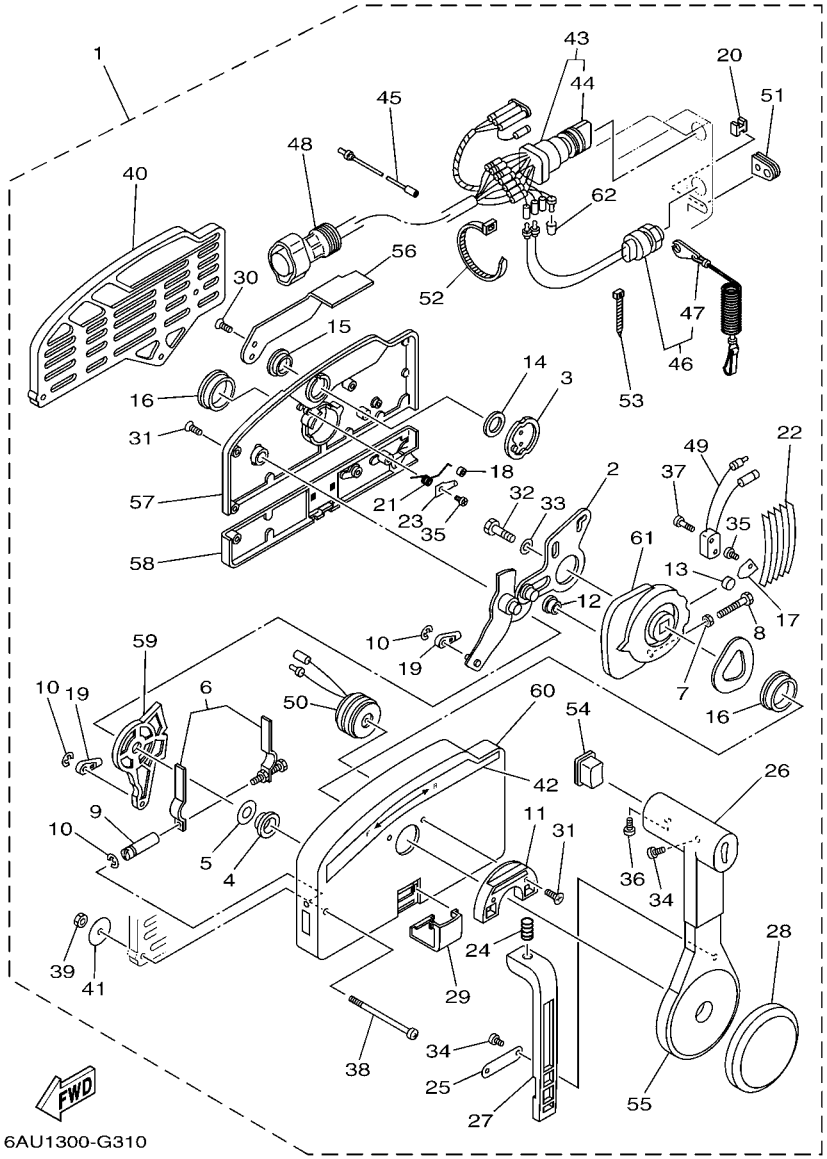

FIG. 31 REMOTE CONTROL ASSY BOITIER DE COMMANDE A DISTANCE

REF. NO.	PART NO. N° PIECES	DESCRIPTION DESCRIPTION	M	E				REMARKS REMARQUES
1	703–48201–16	REMOTE CONTROL ASSY (10P) BOITIER DE COMMANDE A DISTANCE		1				AP WITHOUT PT/T SW. AP WITHOUT PT/T SW.
2	703–48261–01	.ARM, THROTTLE .BRAS, ACCELERATION		1				
3	703–48153–00	.SHAFT, FREE ACCEL. .AXE		1				
4	703–48235–00	.BUSHING .COUSSINET		1				
5	703–48268–00	.SPACER .ENTRETOISE		1				
6	703–48264–00	.FRICTION, THROTTLE .FRICTION, ACCELERATION		1				
7	95380–05600	.NUT .ECROU		1				
8	97380–05025	.BOLT .BOULON, HEXAGONAL		1				
9	703–48265–00	.SHAFT, FRICTION .AXE, COPILOTE		1				
10	93430–06024	.CIRCLIP .CLIPS		3				
11	703–48245–00	.PLATE, LOCK .PLAQUE, VERROU		1				
12	703–48252–00	.ROLLER, CAM .POULIE		1				
13	701–48248–00	.ROLLER, FREE ACCEL. .POULIE		1				
14	703–48198–00	.WASHER, WAVE .RONDELLE, ELASTIQUE ONDULEE		1				
15	703–48243–00	.BUSHING .COUSSINET		1				
16	703–48236–00	.BUSHING 1 .POULIE		2				
17	703–48189–00	.RETAINER .FLASQUE		1				
18	703–48234–00	.ROLLER, DETENT .POULIE		1				
19	703–48345–01	.CABLE END, REMOTE CONTROL 2 .CHAPE CABLE		2				
20	703–48358–00	.ANCHOR, CABLE .COLLIER		1				
21	703–48244–00	.SPRING, FREE ACCEL. .RESSORT		1				
22	703–48238–00	.SPRING, DETENT .RESSORT		5				
23	703–48246–00	.SPACER .ENTRETOISE		1				
24	703–48227–00	.SPRING, NEUTRAL LOCK .RESSORT		1				
25	703–48226–00	.PLATE, STOPPER .PLAQUETTE		1				
26	703–48222–00	.GRIP, CONTROL LEVER .POIGNEE, COMMANDE LEVIER		1				SINGLE SINGLE
27	703–48223–00	.LOCK, NEUTRAL .VERROU, NEUTRAL		1				

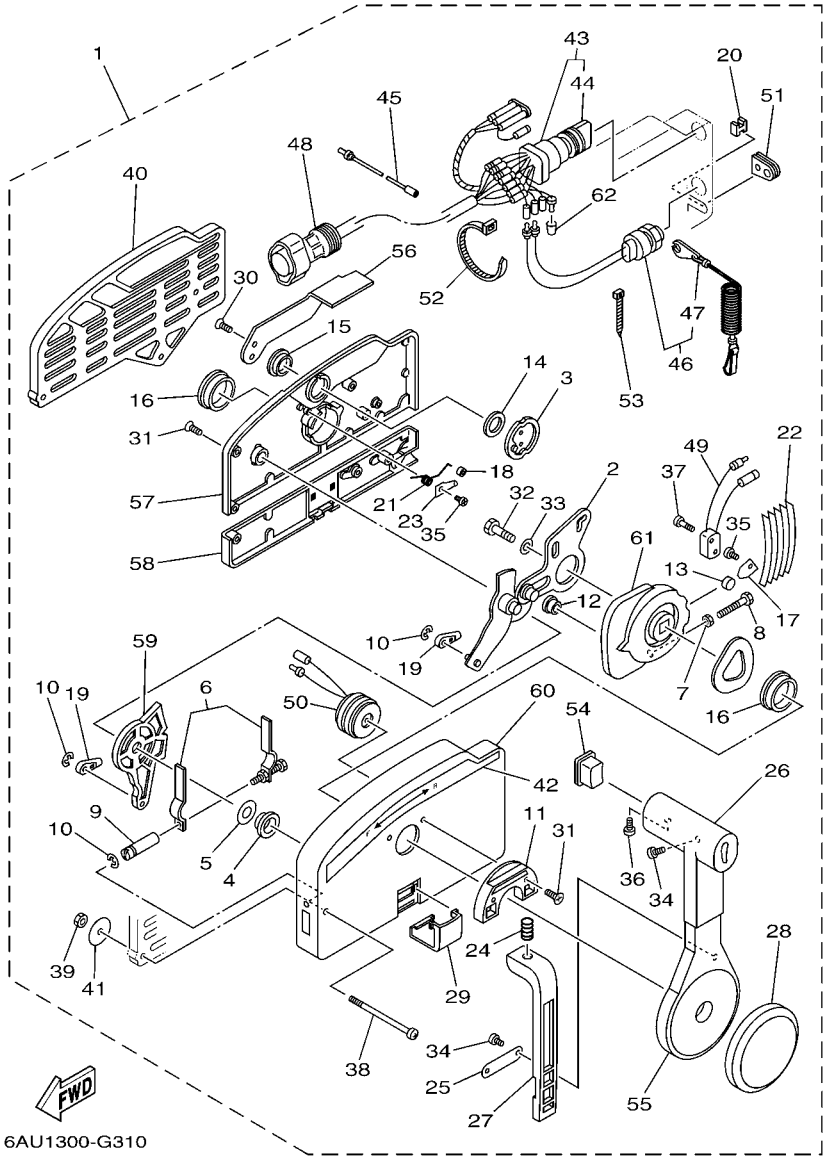

FIG. 31 REMOTE CONTROL ASSY BOITIER DE COMMANDE A DISTANCE

REF. NO.	PART NO. N° PIECES	DESCRIPTION DESCRIPTION	M	E				REMARKS REMARQUES
28	703–48225–00	.COVER .COUVERCLE		1				
29	703–48219–00	.COVER, LEAD .COUVERCLE		1				
30	703–48281–00	.SCREW .VIS		2				
31	703–48282–00	.SCREW .VIS		7				
32	97380–08030	.BOLT .BOULON, HEXAGONAL		1				
33	92990–08600	.WASHER, PLATE .RONDELLE, PLATE		1				
34	98580–04010	.SCREW, PAN HEAD .VIS		3				
35	98580–04006	.SCREW, PAN HEAD .VIS		2				
36	98580–05010	.SCREW, PAN HEAD .VIS		1				
37	98580–03015	.SCREW, PAN HEAD .VIS		2				
38	703–48291–10	.SCREW (M6) .VIS (M6)		3				
39	95380–06600	.NUT, HEXAGON .ECROU		3				
40	703–48293–10	.SPACER, REMOTE CONTROL .ENTRETOISE		1				SINGLE SINGLE
41	701–48287–00	.WASHER .RONDELLE		3				
42	703–48215–00	.GRAPHIC .ADHESIF		1				
43	703–82510–43	.MAIN SWITCH ASSY .CONTACTEUR A CLEF COMPLET		1				
44	703–82577–00	..CAP, KEY ..CABOCHON		1				
45	703–82531–00	.WIRE, LEAD (L70) .FIL (L70)		1				
46	688–82575–01	.ENGINE STOP SWITCH ASSY .COUPE CIRCUIT CPLT		1				
47	682–82556–00	..LANYARD, STOP SWITCH ..PLAQUETTE		1				
48	688–8258A–20	.EXTENSION, WIRE HARNESS (4.9M) .EXTENSION, FAISCEAU DE FILS (4		1				(10P) (10P)
49	703–82540–00	.NEUTRAL SWITCH ASSY .CONTACTEUR DE POINT-MORT		1				
50	703–83383–02	.BUZZER .RONFLEUR		1				
51	703–48284–00	.GROMMET .PASSE-FIL		1				
52	703–82591–00	.BAND .COLLIER		1				
53	703–82592–00	.BAND .COLLIER		1				
54	703–48224–00	.COVER, CONTROL LEVER .COUVERCLE		1				WITHOUT PT/T SW. WITHOUT PT/T SW.

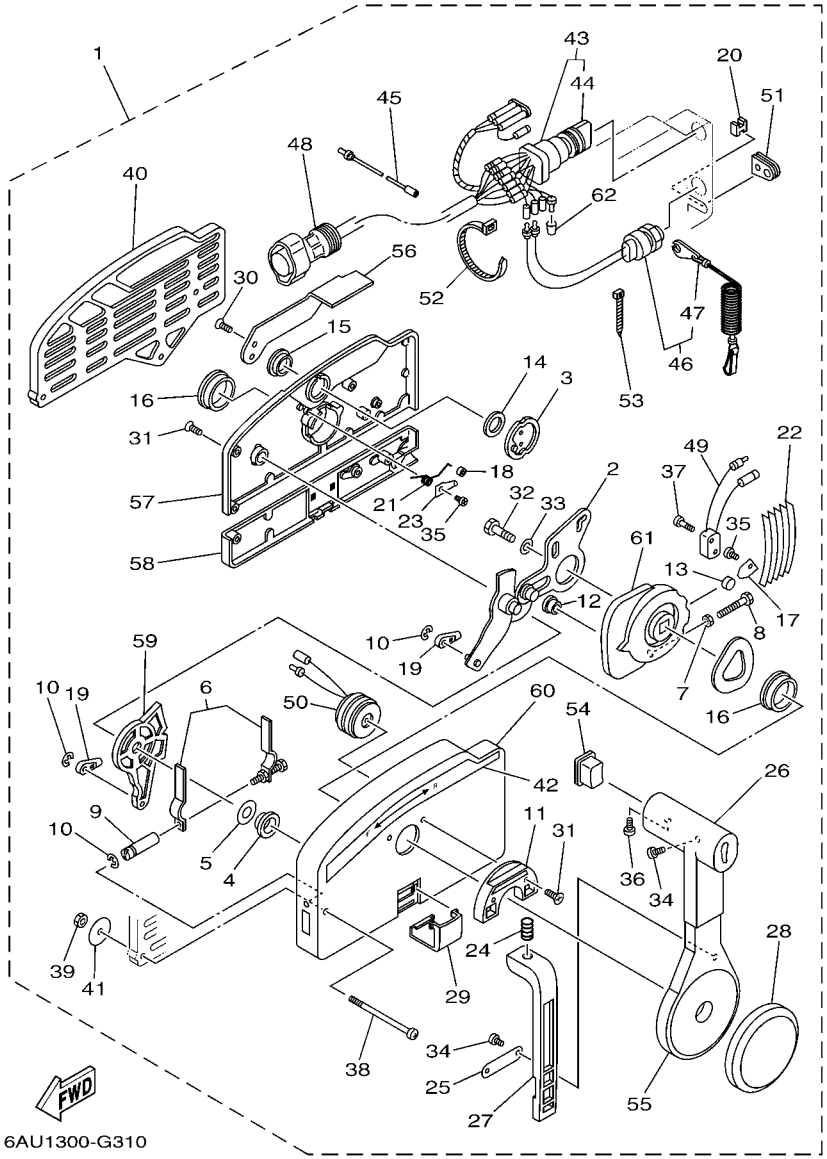

FIG. 31 REMOTE CONTROL ASSY — BOITIER DE COMMANDE A DISTANCE

REF. NO.	PART NO. N° PIECES	DESCRIPTION DESCRIPTION	M	E				REMARKS REMARQUES
55	703–48221–00	.LEVER, CONTROL .LEVIER, COMMANDE		1				
56	703–48152–00	.KNOB, FREE ACCEL. .BOUTON		1				
57	703–48212–00	.BACK PLATE 1 .PLAQUETTE 1		1				
58	703–48213–00	.BACK PLATE 2 .PLAQUETTE 2		1				
59	703–48271–00	.ARM, SHIFT .BRAS		1				
60	703–48211–01	.HOUSING,1 .CORPS		1				
61	703–48232–00	.GEAR .PIGNON		1				
62	703–82542–00	.CAP .COUVERCLE		2				

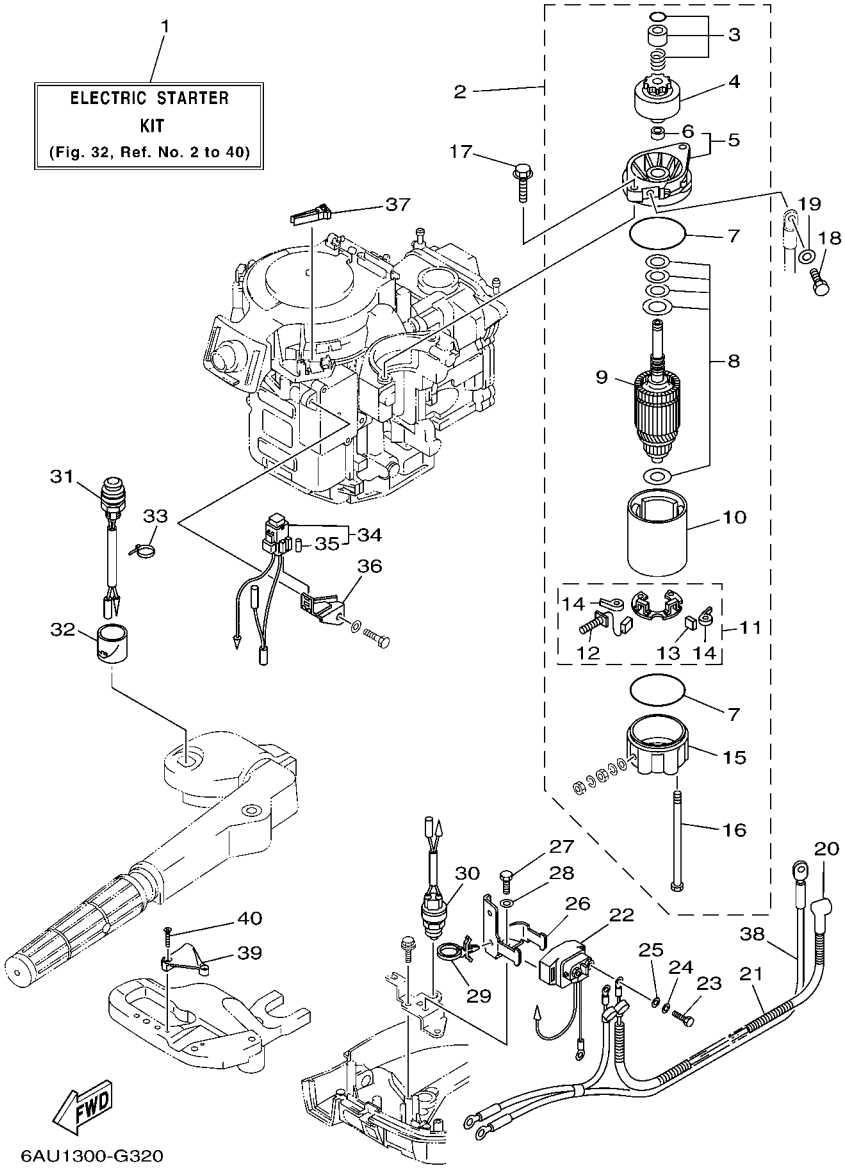

FIG. 32 OPTIONAL PARTS 1 — PIECES OPTIONNELLES 1

REF. NO.	PART NO. N° PIECES	DESCRIPTION DESCRIPTION	M	E				REMARKS REMARQUES
1	68R–W8180–01	ELECTRIC STARTER KIT KIT DEMARREUR ELECTRIQUE	1					AP FOR RUS AP FOR RUS
2	68T–81800–00	STARTING MOTOR ASSY DEMARREUR ELECTRIQUE COMPLET	1					
3	68T–81857–00	.RETAINER .ARRETOIR	1					
4	689–81807–12	.GEAR ASSY, STARTING MOTOR .PIGNON, DEMARREUR ELECTRIQUE	1					
5	6F5–81830–10	.FRONT BRACKET ASSY .SUPPORT AVANT	1					
6	689–81831–00	..METAL, FRONT ..METAL, AVANT	1					
7	689–81847–11	.O-RING .JOINT TORIQUE	2					
8	689–81809–11	.WASHER KIT .JEU DE RONDELLES	1					
9	689–81850–11	.ARMATURE ASSY .INDUIT	1					
10	689–81810–11	.STATOR ASSY .STATOR COMPLET	1					
11	689–81840–11	.BRUSH HOLDER ASSY .SUPPORT DE CHARBON	1					
12	689–81811–11	..BRUSH 1 ..CHARBON 1	1					
13	689–81812–11	..BRUSH 2 ..CHARBON 2	1					
14	689–81813–10	..SPRING, BRUSH ..RESSORT, DE CHARBON	2					
15	689–81820–11	.REAR BRACKET ASSY .SUPPORT ARRIERE COMPLET	1					
16	689–81826–10	.BOLT .BOULON	2					
17	90119–08M76	BOLT, WITH WASHER BOULON, AVEC RONDELLE	2					
18	97095–08016	BOLT BOULON	1					
19	92995–08600	WASHER RONDELLE	1					
20	6G8–82117–00	WIRE, LEAD FIL	1					
21	90446–10M86	HOSE (L140) DURITE (L140)	1					
22	68T–81940–00	STARTER RELAY ASSY LANCEUR RELAIS (ENS.)	1					
23	97095–06010	BOLT BOULON	2					
24	92995–06100	WASHER, SPRING RONDELLE, GROWER	2					
25	92995–06600	WASHER RONDELLE	2					
26	68T–81945–01	PLATE, SWITCH FITTING PLAQUE, FIXATION DU RELAIS	1					
27	97095–06012	BOLT BOULON	1					

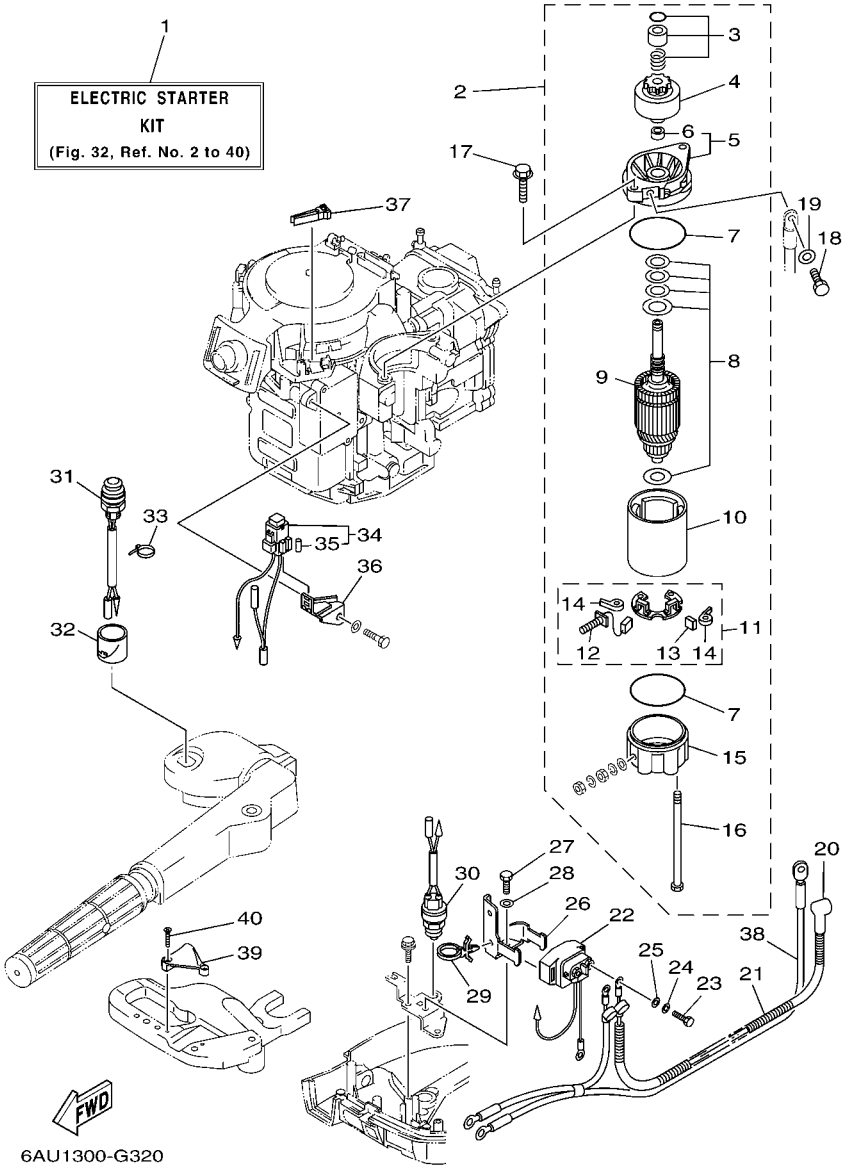

FIG. 32 OPTIONAL PARTS 1 PIECES OPTIONNELLES 1

REF. NO.	PART NO. N° PIECES	DESCRIPTION DESCRIPTION	M	E				REMARKS REMARQUES
28	92995–06600	WASHER RONDELLE	1					
29	90465–12M56	CLAMP BRIDE	1					
30	6F5–82540–01	NEUTRAL SWITCH ASSY CONTACTEUR DE POINT-MORT	1					
31	68T–81870–00	STARTING SWITCH ASSY CONTACT A CLEF	1					
32	68T–81821–00	COVER, SWITCH COUVERCLE, COMMUTATEUR	1					
33	90465–11M10	CLAMP BRIDE	1					
34	68T–82150–00	FUSE HOLDER ASSY SUPPORT DE FUSIBLE	1					
35	66V–82151–00	.FUSE (10A-BL) .FUSIBLE (10A-BL)	2					
36	68T–82171–01	STAY, FUSE BOX SUPPORT, BOITE A FUSIBLES	1					
37	67F–2812A–00	PULLER, FUSE TENDEUR, FUSIBLE	1					
38	68T–82105–00	WIRE HARNESS (L: 2.1M) FAISCEAU DE FILS (L: 2.1M)	1					
39	68T–82594–00	CLAMP BRIDE	1					
40	90151–05003	SCREW, COUNTERSUNK VIS, TETE NOYEE	2					

FIG. 33 OPTIONAL PARTS 2 PIECES OPTIONNELLES 2

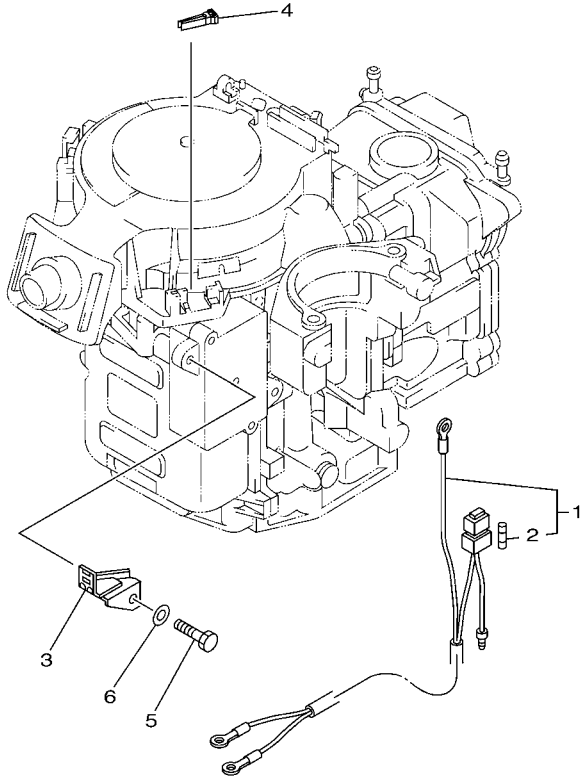

6AU1100-G320

REF. NO.	PART NO. N° PIECES	DESCRIPTION DESCRIPTION	M	E				REMARKS REMARQUES
1	68T–81949–00	WIRE, LEAD FIL	1					AP FOR RUS AP FOR RUS
2	66V–82151–00	.FUSE (10A-BL) .FUSIBLE (10A-BL)	2					
3	68T–82171–01	STAY, FUSE BOX SUPPORT, BOITE A FUSIBLES	1					AP FOR RUS AP FOR RUS
4	67F–2812A–00	PULLER, FUSE TENDEUR, FUSIBLE	1					AP FOR RUS AP FOR RUS
5	97095–06012	BOLT BOULON	1					AP FOR RUS AP FOR RUS
6	92995–06600	WASHER RONDELLE	1					AP FOR RUS AP FOR RUS

FIG. 34 REPAIR KIT 1 — KITS DE REPARATION 1

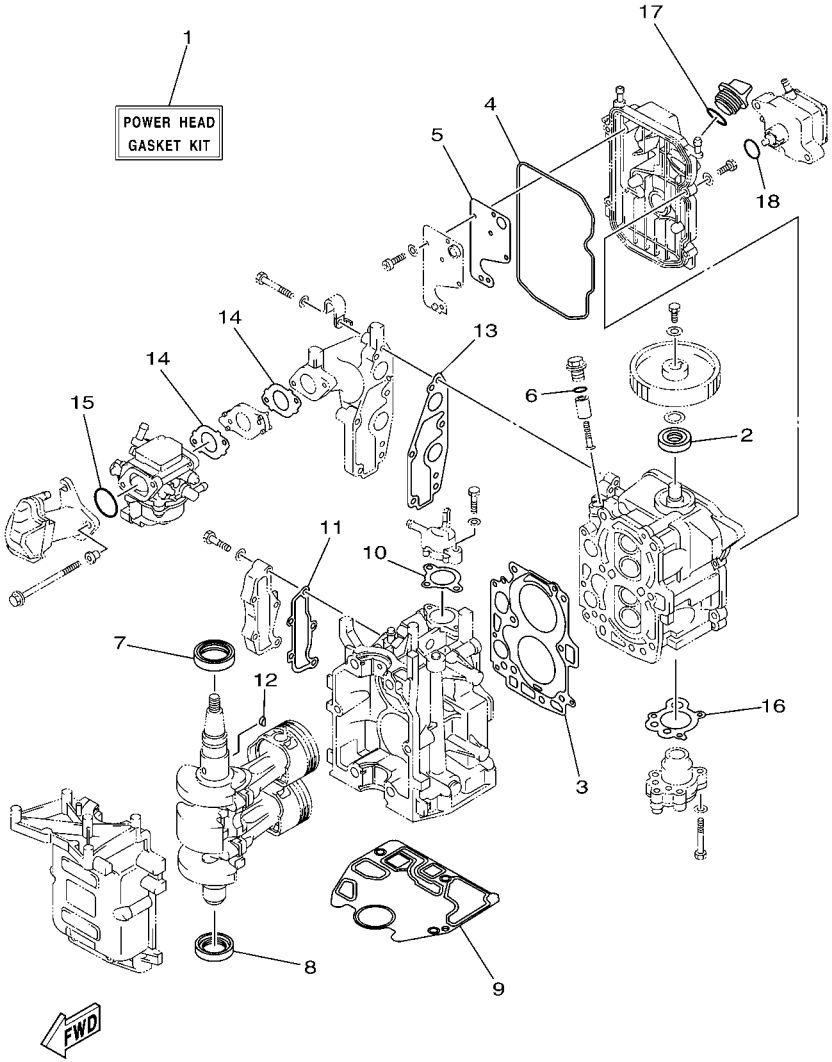

6AU1100-G340

REF. NO.	PART NO. N° PIECES	DESCRIPTION DESCRIPTION	M	E				REMARKS REMARQUES
1	6AU–W0001–00	POWER HEAD GASKET KIT POCHETTE DE JINTS TETE MOTRICE	1	1				
2	93102–18M21	.OIL SEAL .JOINT SPY	1	1				
3	68T–11181–00	.GASKET, CYLINDER HEAD 1 .JOINT, DE CULASSE 1	1	1				
4	68T–11356–00	.SEAL, CYLINDER 2 .JOINT, SPY CYLINDRE	1	1				
5	68T–11169–A0	.GASKET, BREATHER COVER .JOINT, COUVERCLE DE RENIFLARD	1	1				
6	93210–13M63	.O-RING .JOINT TORIQUE	1	1				
7	93102–30M22	.OIL SEAL .JOINT SPY	1	1				
8	93101–25M69	.OIL SEAL .JOINT SPY	1	1				
9	68T–11351–00	.GASKET, CYLINDER .JOINT, D'EMBASE	1	1				
10	6G8–12414–A0	.GASKET, COVER .JOINT, COUVERCLE	1	1				
11	68T–41114–A0	.GASKET, EXHAUST OUTER COVER .JOINT, COUVERCLE D'ECHAPPEMENT	1	1				
12	90280–03M01	.KEY, WOODRUFF .CLAVETTE, DEMI-LUNE	1	1				
13	68T–13645–00	.GASKET, MANIFOLD 1 .JOINT, TUBULURE 1	1	1				
14	68T–13646–A0	.GASKET, MANIFOLD 2 .JOINT, TUBULURE 2	2	2				
15	93210–31MJ5	.O-RING .JOINT TORIQUE	1	1				
16	68T–13329–00	.GASKET, PUMP COVER .JOINT, COUVERCLE DE POMPE	1	1				
17	93210–24M79	.O-RING .JOINT TORIQUE	1	1				
18	93210–20M65	.O-RING .JOINT TORIQUE	1	1				

FIG. 35 REPAIR KIT 2 — KITS DE REPARATION 2

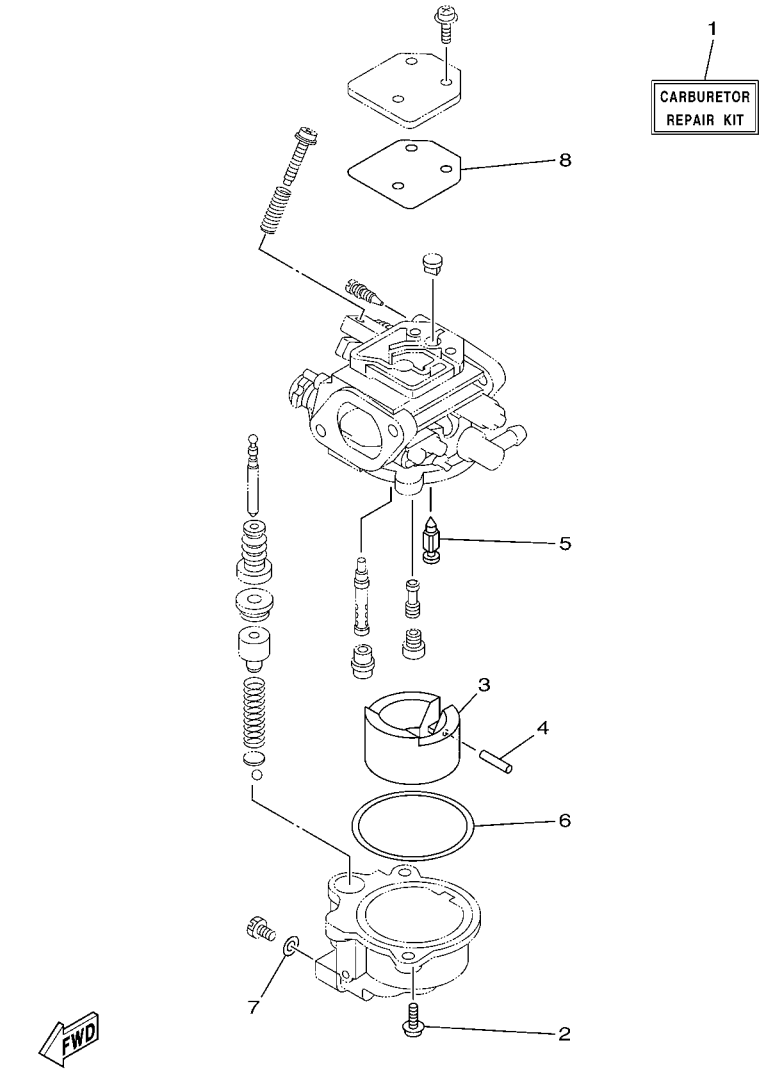

REF. NO.	PART NO. N° PIECES	DESCRIPTION DESCRIPTION	M	E				REMARKS REMARQUES
1	6AU–W0093–00	CARBURETOR REPAIR KIT KIT DE REPARATION CARBURATEUR	1	1				
2	97980–04112	.SCREW, WITH WASHER .VIS, AVEC RONDELLE	2	2				
3	6AU–14385–00	.FLOAT .FLOTTEUR	1	1				
4	67D–14386–00	.PIN, FLOAT .AXE, FLOTTEUR	1	1				
5	68T–14546–00	.VALVE, NEEDLE .POINTEAU	1	1				
6	6AU–14984–00	.GASKET, FLOAT CHAMBER .JOINT, CUVE DE FLOTTEUR	1	1				
7	6J8–14959–00	.GASKET .JOINT	1	1				
8	67D–14536–00	.GASKET .JOINT	1	1				

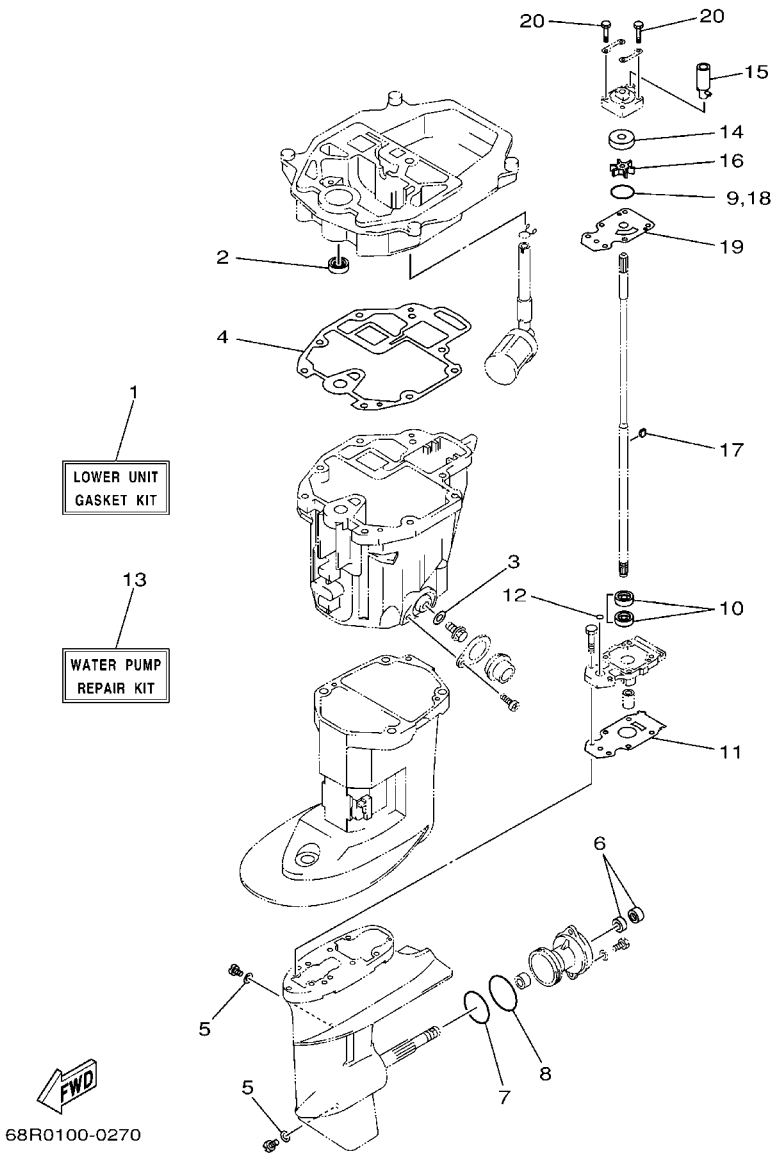

FIG. 36 REPAIR KIT 3 — KITS DE PEPARATION 3

REF. NO.	PART NO. N° PIECES	DESCRIPTION DESCRIPTION	M	E				REMARKS REMARQUES
1	68T–W0001–20	LOWER UNIT GASKET KIT POCHETTE DE JOINTS EMBASE	1	1				
2	93101–12M70	.OIL SEAL .JOINT SPY	1	1				
3	90430–10M11	.GASKET .JOINT	1	1				
4	68T–13475–00	.GASKET .JOINT	1	1				
5	90430–08020	.GASKET .JOINT	2	2				
6	93101–15074	.OIL SEAL .JOINT SPY	2	2				
7	93210–49046	.O-RING .JOINT TORIQUE	1	1				
8	93210–53M08	.O-RING .JOINT TORIQUE	1	1				
9	93210–44398	.O-RING .JOINT TORIQUE	1	1				
10	93101–11M23	.OIL SEAL .JOINT SPY	2	2				
11	68T–45315–A0	.PACKING, LOWER CASING .JOINT, BOITIER D'HELICE	1	1				
12	93210–06ME6	.O-RING .JOINT TORIQUE	1	1				
13	68T–W0078–00	WATER PUMP REPAIR KIT KIT DE REPARATION DE LA POMPE	1	1				
14	63V–44322–00	.INSERT, CARTRIDGE .CUVETTE	1	1				
15	68T–44366–00	.DAMPER, WATER SEAL .JOINT, TUBE D'EAU	1	1				
16	68T–44352–00	.IMPELLER .TURBINE	1	1				
17	664–44338–00	.KEY, WOODRUFF .CLAVETTE, VOLANT	1	1				
18	93210–44398	.O-RING .JOINT TORIQUE	1	1				
19	68T–44323–00	.OUTER PLATE, CARTRIDGE .PLAQUE EXTERIEURE	1	1				
20	97080–08045	.BOLT .BOULON	4	4				